SERVICE MANUAL

MODEL	DEST.
VPL-CS4	WORLD Serial No. 10,001 to 5,000,000
VPL-CS4	WORLD Serial No. 5,000,001 and later
VPL-CX4	WORLD Serial No. 10,001 to 5,000,000
VPL-CX4	WORLD Serial No. 5,000,001 and later

MODEL	DEST.
RM-PJ2	WORLD
RM-PJM11	WORLD

REVISED-1

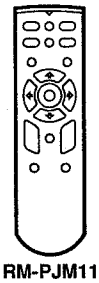

RM-PJM11

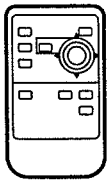

RM-PJ2

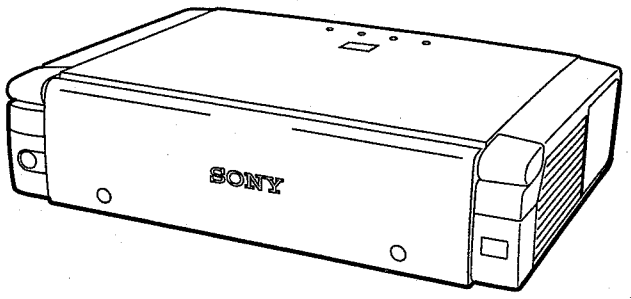

RM-PJ2 Remote Commander For VPL-CS4
RM-PJM11 Remote Commander For VPL-CX4

LCD DATA PROJECTOR

SONY

⚠警告

このマニュアルは，サービス専用です。
お客様が，このマニュアルに記載された設置や保守，点検，修理などを行うと感電や火災，人身事故につながることがあります。
危険をさけるため，サービストレーニングを受けた技術者のみご使用ください。

⚠WARNING

This manual is intended for qualified service personnel only.
To reduce the risk of electric shock, fire or injury, do not perform any servicing other than that contained in the operating instructions unless you are qualified to do so. Refer all servicing to qualified service personnel.

⚠WARNUNG

Die Anleitung ist nur für qualifiziertes Fachpersonal bestimmt.
Alle Wartungsarbeiten dürfen nur von qualifiziertem Fachpersonal ausgeführt werden. Um die Gefahr eines elektrischen Schlages, Feuergefahr und Verletzungen zu vermeiden, sind bei Wartungsarbeiten strikt die Angaben in der Anleitung zu befolgen. Andere als die angegeben Wartungsarbeiten dürfen nur von Personen ausgeführt werden, die eine spezielle Befähigung dazu besitzen.

⚠AVERTISSEMENT

Ce manual est destiné uniquement aux personnes compétentes en charge de l'entretien. Afin de réduire les risques de décharge électrique, d'incendie ou de blessure n'effectuer que les réparations indiquées dans le mode d'emploi à moins d'être qualifié pour en effectuer d'autres. Pour toute réparation faire appel à une personne compétente uniquement.

WARNING!!

AN INSULATED TRANSFORMER SHOULD BE USED DURING ANY SERVICE TO AVOID POSSIBLE SHOCK HAZARD, BECAUSE OF LIVE CHASSIS.
THE CHASSIS OF THIS RECEIVER IS DIRECTLY CONNECTED TO THE AC POWER LINE.

SAFETY-RELATED COMPONENT WARNING !!

COMPONENTS IDENTIFIED BY A ⚠ MARK ON THE SCHEMATIC DIAGRAMS, EXPLODED VIEWS AND IN THE PARTS LIST ARE CRITICAL TO SAFE OPERATION. REPLACE THESE COMPONENTS WITH SONY PARTS WHOSE PART NUMBERS APPEAR AS SHOWN IN THIS MANUAL OR IN SUPPLEMENTS PUBLISHED BY SONY.

ATTENTION!!

AFIN D'ÉVITER TOUT RISQUE D'ÉLECTROCUTION PROVENANT D'UN CHÂSSIS SOUS TENSION, UN TRANSFORMATEUR D'ISOLEMENT DOIT ETRE UTILISÉ LORS DE TOUT DÉPANNAGE.
LE CHÂSSIS DE CE RÉCEPTEUR EST DIRECTEMENT RACCORDÉ Á L'ALIMENTATION SECTEUR.

ATTENTION AUX COMPOSANTS RELATIFS Á LA SÉCURITÉ!!

LES COMPOSANTS IDENTIFIÉS PAR UNE MAPQUE ⚠ SUR LES SCHÉMAS DE PRINCIPE, LES VUES EXPLOSÉES ET LES LISTES DE PIECES SONT D'UNE IMPORTANCE CRITIQUE POUR LA SÉCURITÉ DU FONCTIONNEMENT. NE LES REMPLACER QUE PAR DES COMPOSANTS SONY DONT LE NUMÉRO DE PIÈCE EST INDIQUÉ DANS LE PRÉSENT MANUEL OU DANS DES SUPPLÉMENTS PUBLIÉS PAR SONY.

CAUTION

Danger of explosion if battery is incorrectly replaced.

Replace only with the same or equivalent type recommended by the manufacturer.
Dispose of used batteries according to the manufacturer's instructions.

ADVARSEL

Lithiumbatteri - Eksplosjonsfare.
Ved utskifting benyttes kun batteri som anbefalt av apparatfabrikanten.
Brukt batteri returneres apparatleverandøren.

Vorsicht!

Explosionsgefahr bei unsachgemäßem Austausch der Batterie.

Ersatz nur durch denselben oder einen vom Hersteller empfohlenen ähnlichen Typ. Entsorgung gebrauchter Batterien nach Angaben des Herstellers.

VARNING

Explosionsfara vid felaktigt batteribyte.
Använd samma batterityp eller en likvärdig typ som rekommenderas av apparattillverkaren.
Kassera använt batteri enligt gällande föreskrifter.

ATTENTION

Il y a danger d'explosion s'il y a remplacement incorrect de la batterie.

Remplacer uniquement avec une batterie du même type ou d'un type équivalent recommandé par le constructeur.
Mettre au rebut les batteries usagées conformément aux instructions du fabricant.

VAROITUS

Paristo voi räjähtää jos se on virheellisesti asennettu.
Vaihda paristo ainoastaan laitevalmistajan suosittelemaan tyyppiin.
Hävitä käytetty paristo valmistajan ohjeiden mukaisesti.

ADVARSEL!

Lithiumbatteri-Eksplosionsfare ved fejlagtig håndtering.
Udskiftning må kun ske med batteri af samme fabrikat og type.
Levér det brugte batteri tilbage til leverandøren.

For the customers in the Netherlands
Voor de klanten in Nederland

Dit apparaat bevat een MnO_2-Li batterij voor memory back-up.

Raadpleeg de instructies deze handleiding voor het verwijderen van de batterijen.

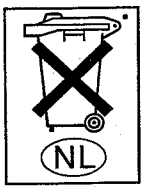

- Gooi de batterij niet weg. maar lever hem in als KCA.

For the customers in the Netherlands
Voor de klanten in Nederland

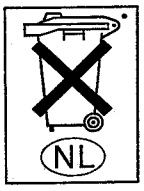

- Gooi de batterij niet weg. maar lever hem in als KCA.

Table of Contents

1. Service Informations

1-1. Board Layouts 1-1
1-2. Disassembly and Extension Boards 1-2
1-2-1. Hood Block Assy Removal 1-2
1-2-2. H Board Removal 1-3
1-2-3. C Board Removal 1-3
1-2-4. F Board Removal 1-4
1-2-5. Optical Block Assy Removal 1-4
1-2-6. BB and GB Boards Removal (VPL-CS4) 1-5
1-2-7. QA, BB and GB Boards Removal (VPL-CX4) 1-5
1-2-8. QB and BA Boards Removal (VPL-CS4) 1-6
1-2-9. QB and BA Boards Removal (VPL-CX4) 1-6
1-2-10. V Board Removal 1-7
1-2-11. GA Board Removal 1-7
1-2-12. Lamp Power and GC Board Removal 1-8
1-2-13. Projection Lens Removal 1-8
1-2-14. Prism Block Assy and In-polarizer Removal 1-9
1-2-15. Extension Boards and Extension Cables 1-10
1-2-16. Extension Boards and Extension Cables Connection 1-11
1-2-17. Warning on Power Connection 1-11

2. Electrical Adjustments

2-1. Preparations 2-1
2-1-1. Equipment Required 2-1
2-1-2. Optical Unit Adjustment 2-1
2-1-3. Factory Mode Setting 2-1
2-2. V-COM Adjustment 2-1
2-3. Adjustment Item Initialize Data 2-2
2-4. Service Knowhow 2-6
2-4-1. After Replacing the Prism Block 2-6
2-4-2. After Replacing the Board 2-6
2-5. White Balance Adjustment on Servicing 2-7
2-5-1. Signal Level Adjustment 2-7
2-5-2. White Balance Adjustment 2-7
2-6. Memory 2-8

3. Semiconductors

IC 3-1
Transistor 3-3
Diode 3-4

4. Spare Parts

4-1. Notes on Repair Parts 4-1
4-2. Exploded Views 4-2
4-2-1. Cover 4-2
4-2-2. Chassis 4-4
4-2-3. Base 4-6
4-2-4. Optics 1 4-8
4-2-5. Optics 2 4-9
4-3. Electrical Parts List 4-10
4-4. Accessories 4-33

5. Block Diagrams

Overall Block 5-1
BB Block 5-2
C Block (For VPL-CS4) 5-4
C Block (For VPL-CX4) 5-6
BA Block 5-8
QA Block 5-8
QB Block 5-8
F Block 5-9
GA Block 5-9
GB Block 5-9
GC Block 5-9

6. Diagrams

6-1. Frame Schematic Diagram 6-2

6-2. Schematic Diagrams and Printed Wiring Boards 6-4

Schematic Diagrams

BA 6-5
BB 6-10
C 6-19
F 6-26
GA 6-27
GB 6-29
GC 6-30
H 6-31
NF 6-31
QB 6-32
V 6-33
QA 6-36

Printed Wiring Boards

BA 6-4
BB 6-8
C 6-14
F 6-26
GA 6-27
GB 6-28
GC 6-30
H 6-31
NF 6-31
QB 6-32
V 6-33
QA 6-34

Section 1
Service Informations

1-1. Board Layouts

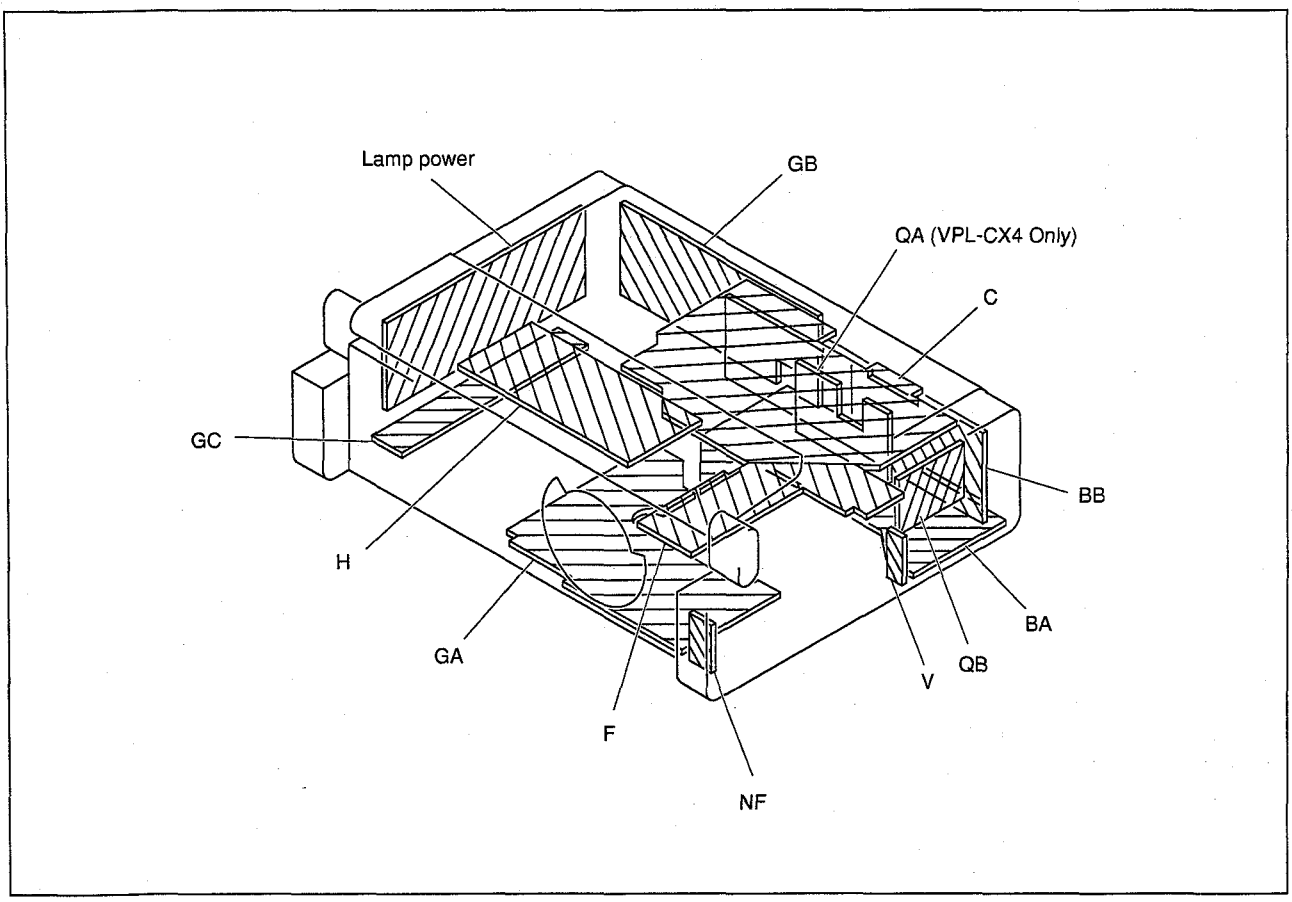

1-2. Disassembly and Extension Boards

1-2-1. Hood Block Assy Removal

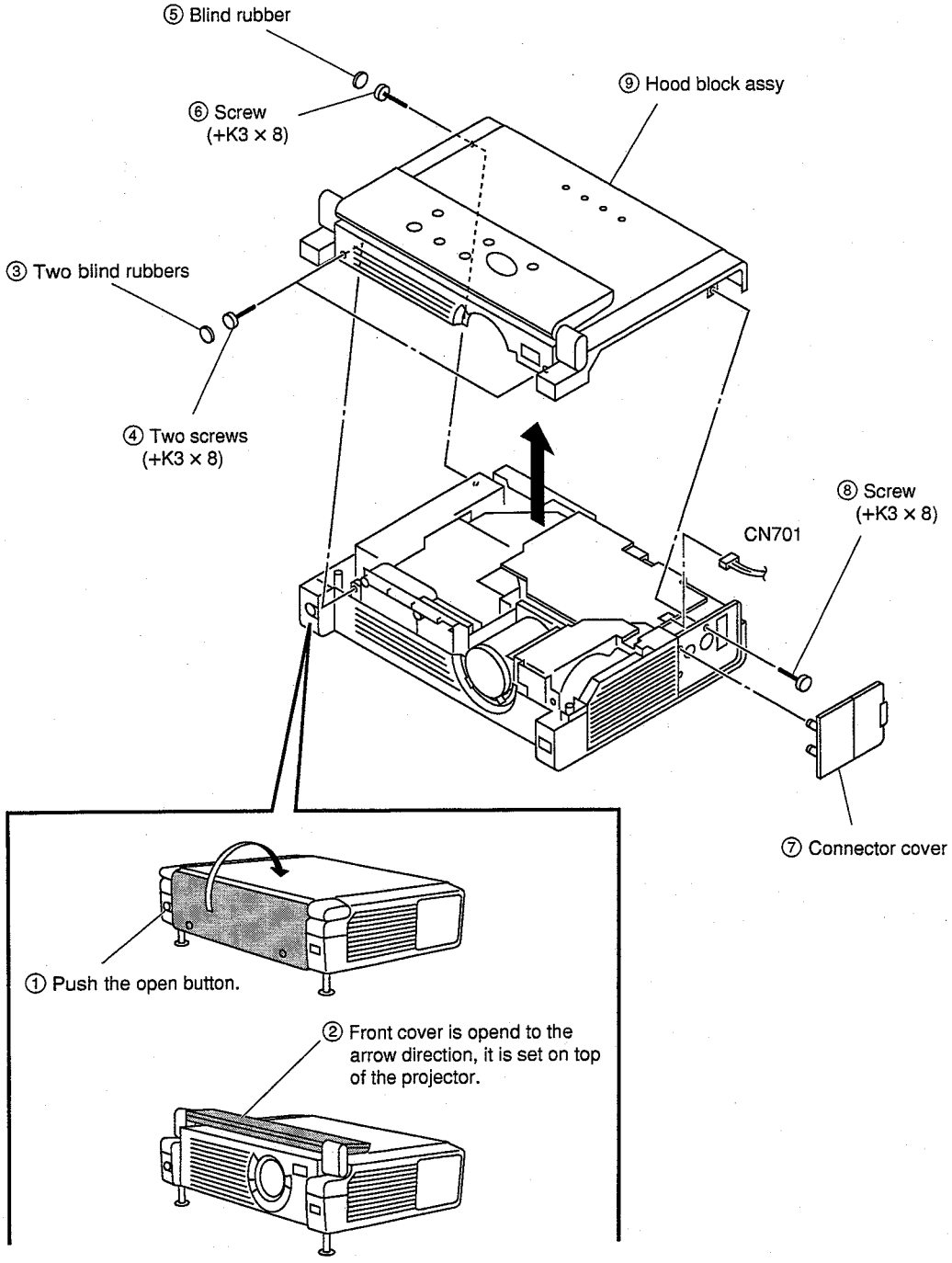

1-2-2. H Board Removal

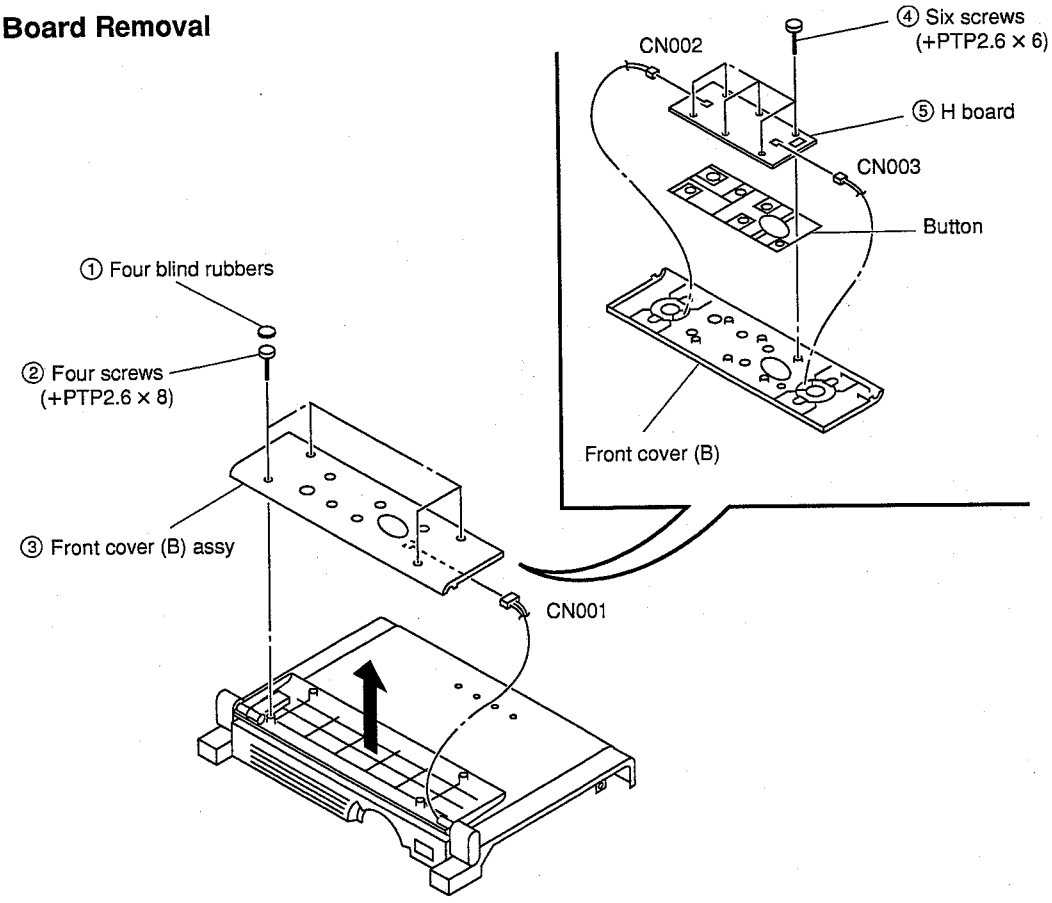

1-2-3. C Board Removal

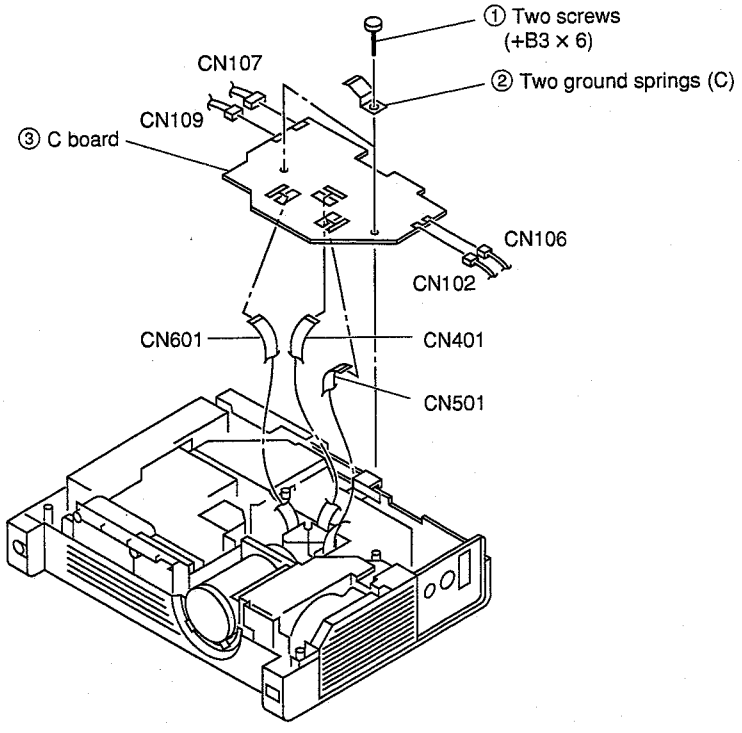

1-2-4. F Board Removal

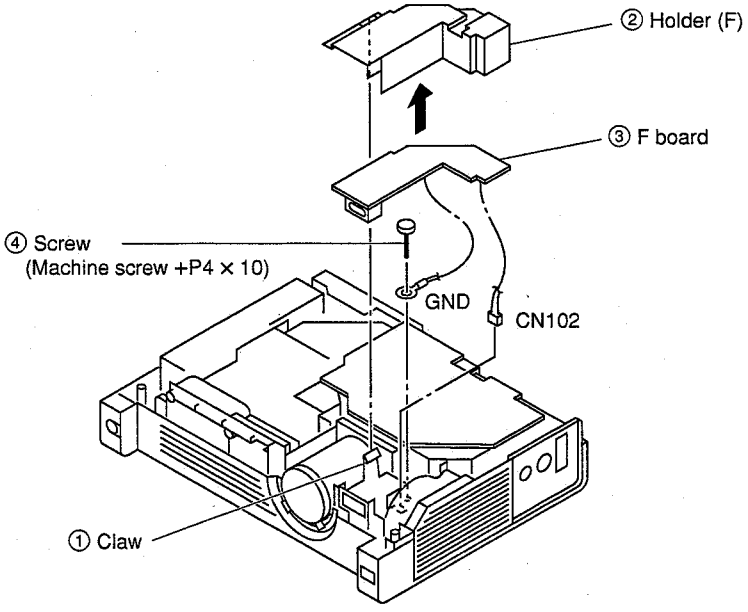

1-2-5. Optical Block Assy Removal

* Remove the C board. (Refer to Sec.1-2-3.)
* Remove the F board. (Refer to Sec.1-2-4.)

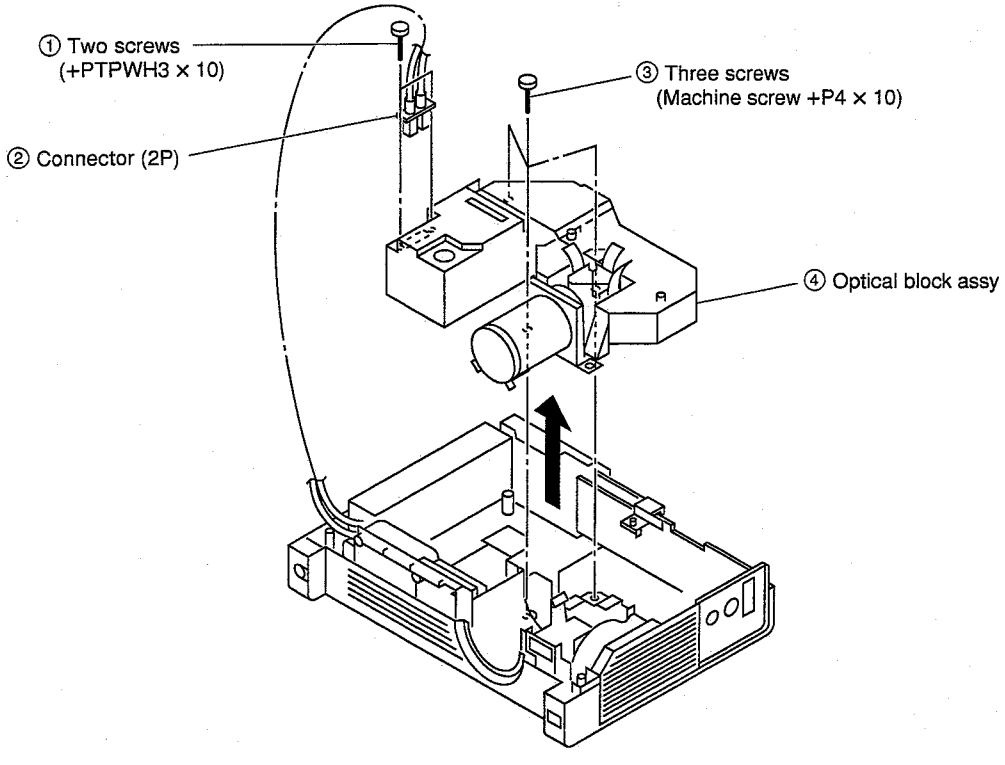

1-2-6. BB and GB Boards Removal (VPL-CS4)

* Remove the optical block assy. (Refer to Sec.1-2-5.)

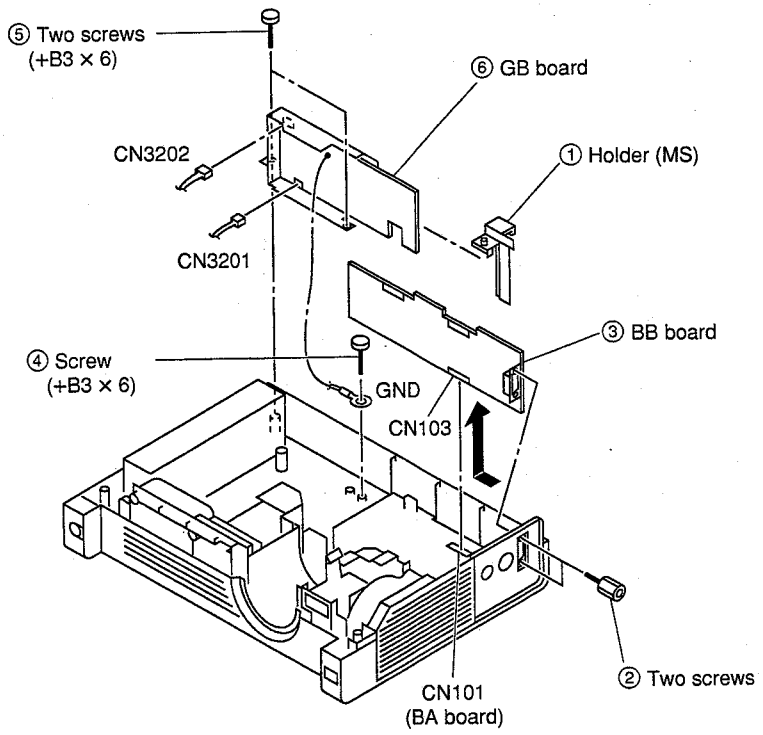

1-2-7. QA, BB and GB Boards Removal (VPL-CX4)

* Remove the optical block assy. (Refer to Sec.1-2-5.)

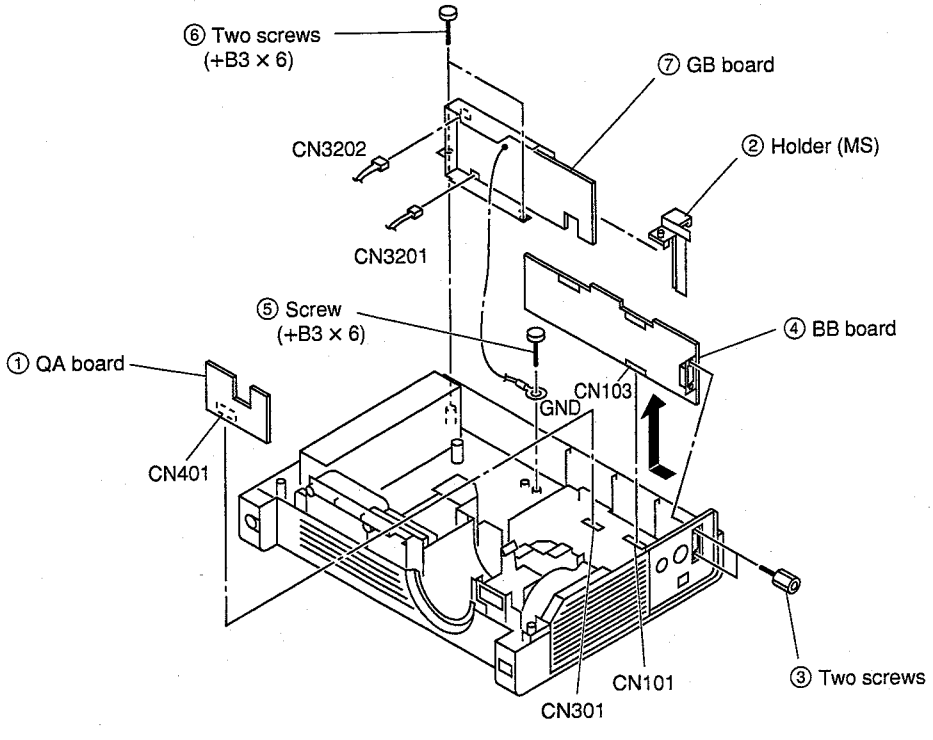

1-2-8. QB and BA Boards Removal (VPL-CS4)

* Remove the BB and GB boards. (Refer to Sec.1-2-6.)

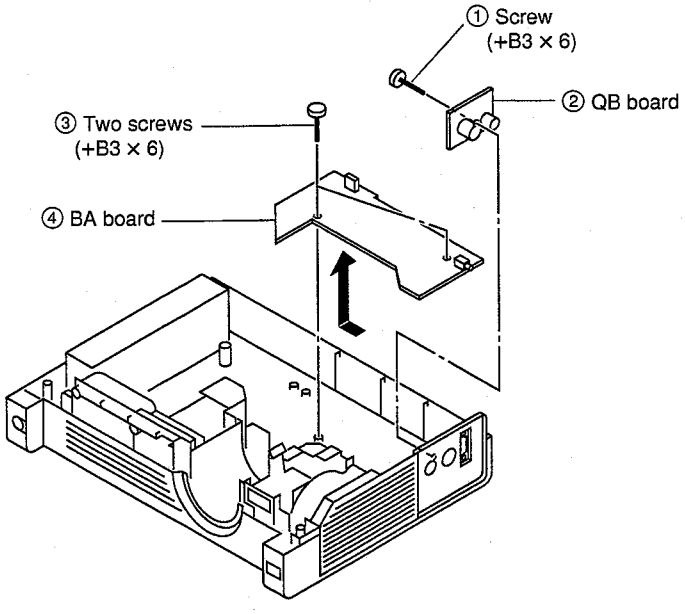

1-2-9. QB and BA Boards Removal (VPL-CX4)

* Remove the QA, BB and GB boards. (Refer to Sec.1-2-7.)

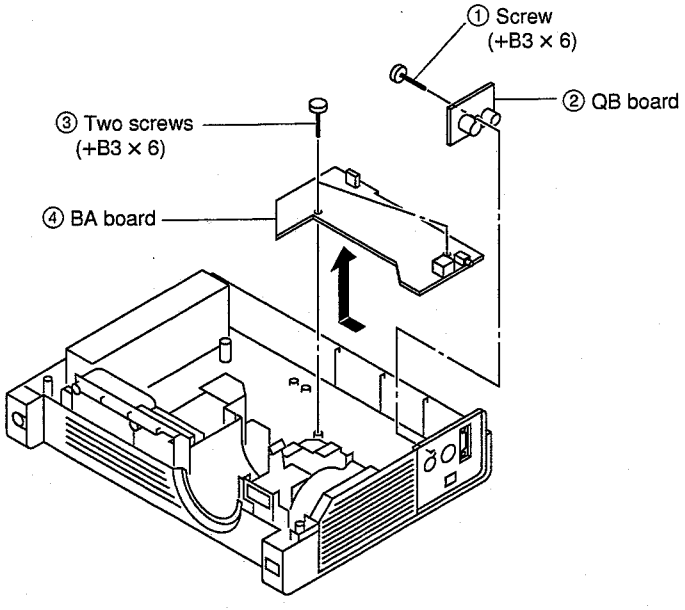

1-2-10. V Board Removal

* Remove the optical block assy. (Refer to Sec.1-2-5.)

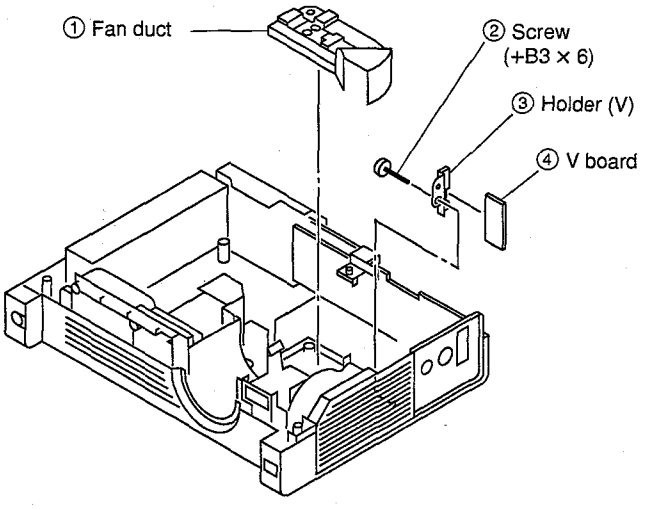

1-2-11. GA Board Removal

* Remove the optical block assy. (Refer to Sec.1-2-5.)

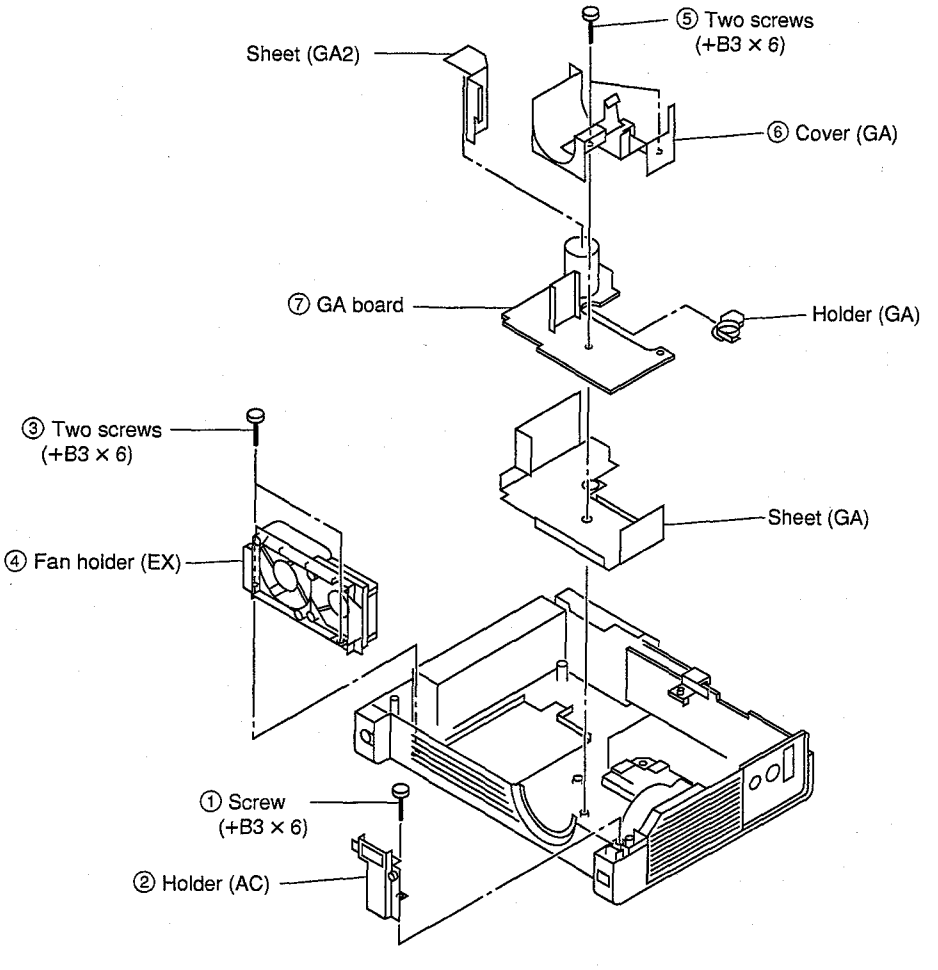

1-2-12. Lamp Power and GC Board Removal

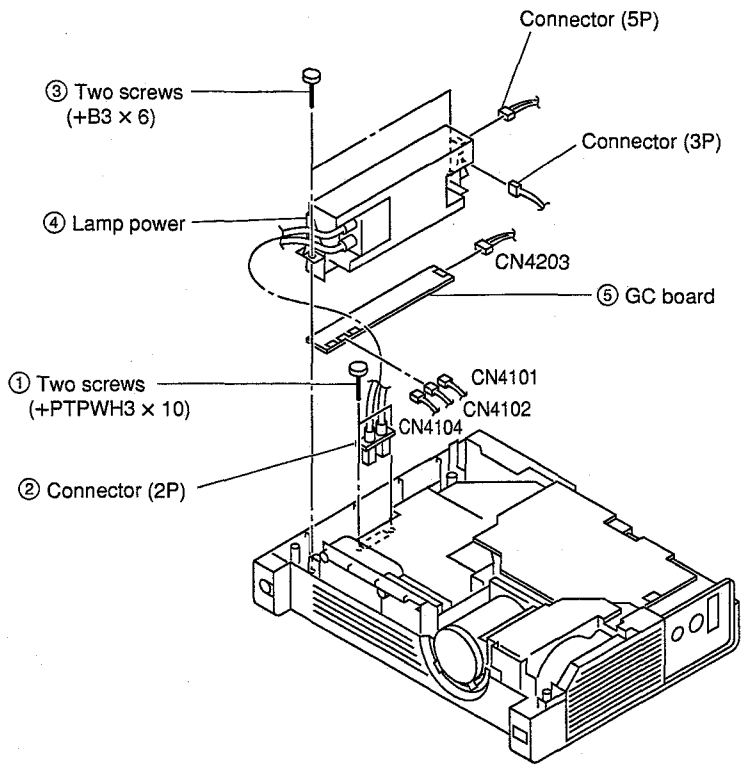

1-2-13. Projection Lens Removal

* Remove the optical block assy. (Refer to Sec.1-2-5.)

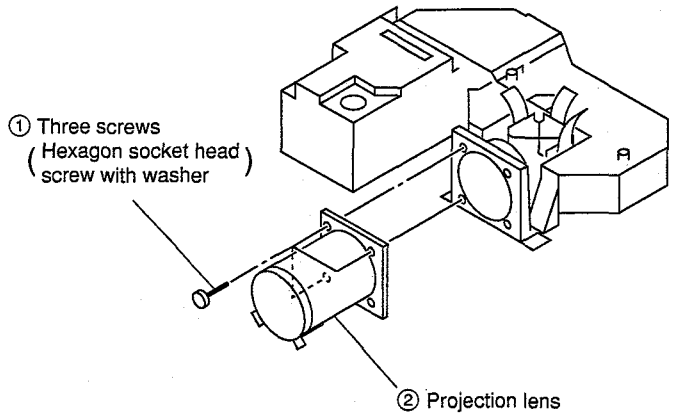

1-2-14. Prism Block Assy and In-polarizer Removal

* Remove the projection lens. (Refer to Sec.1-2-13.)

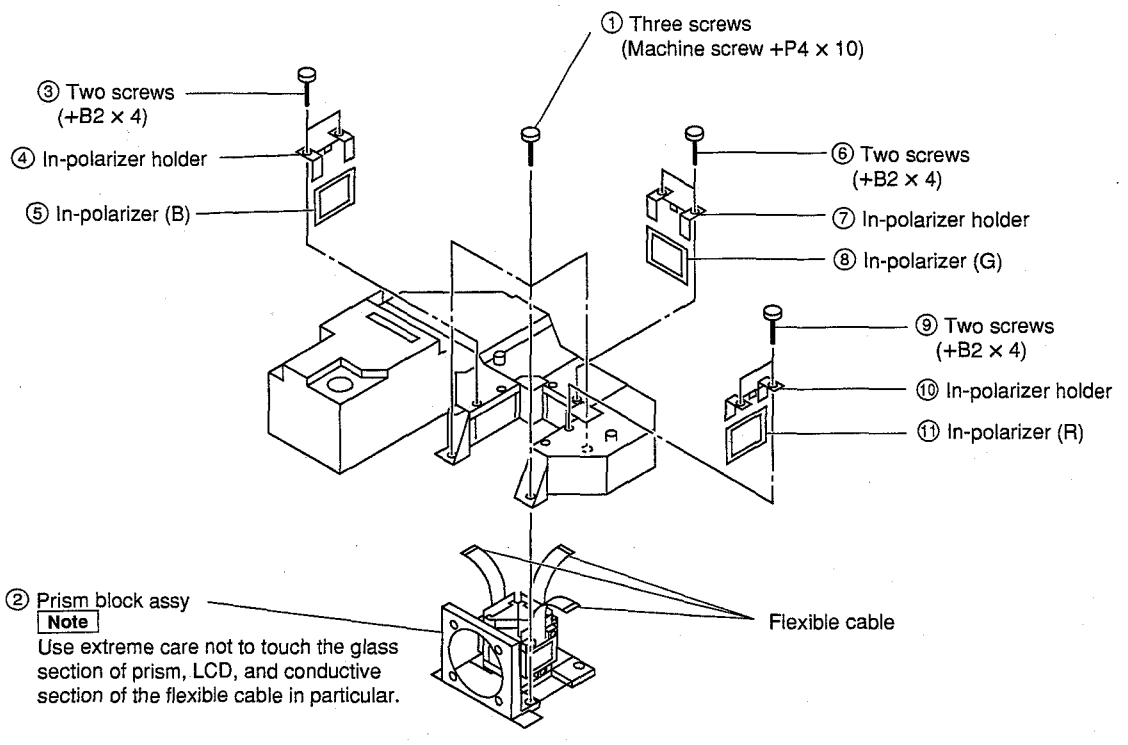

1-2-15. Extension Boards and Extension Cables

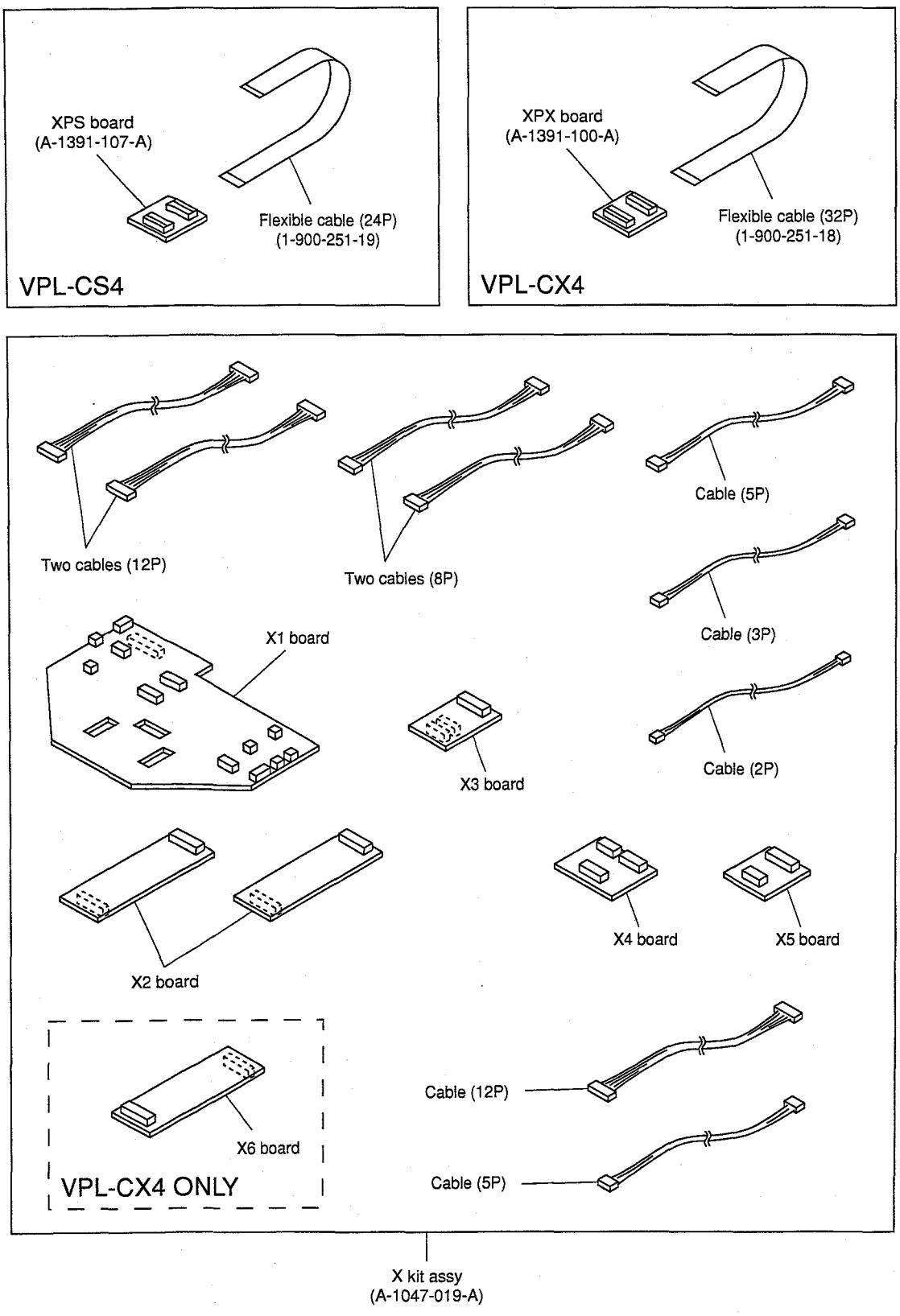

1-2-16. Extension Boards and Extension Cables Connection

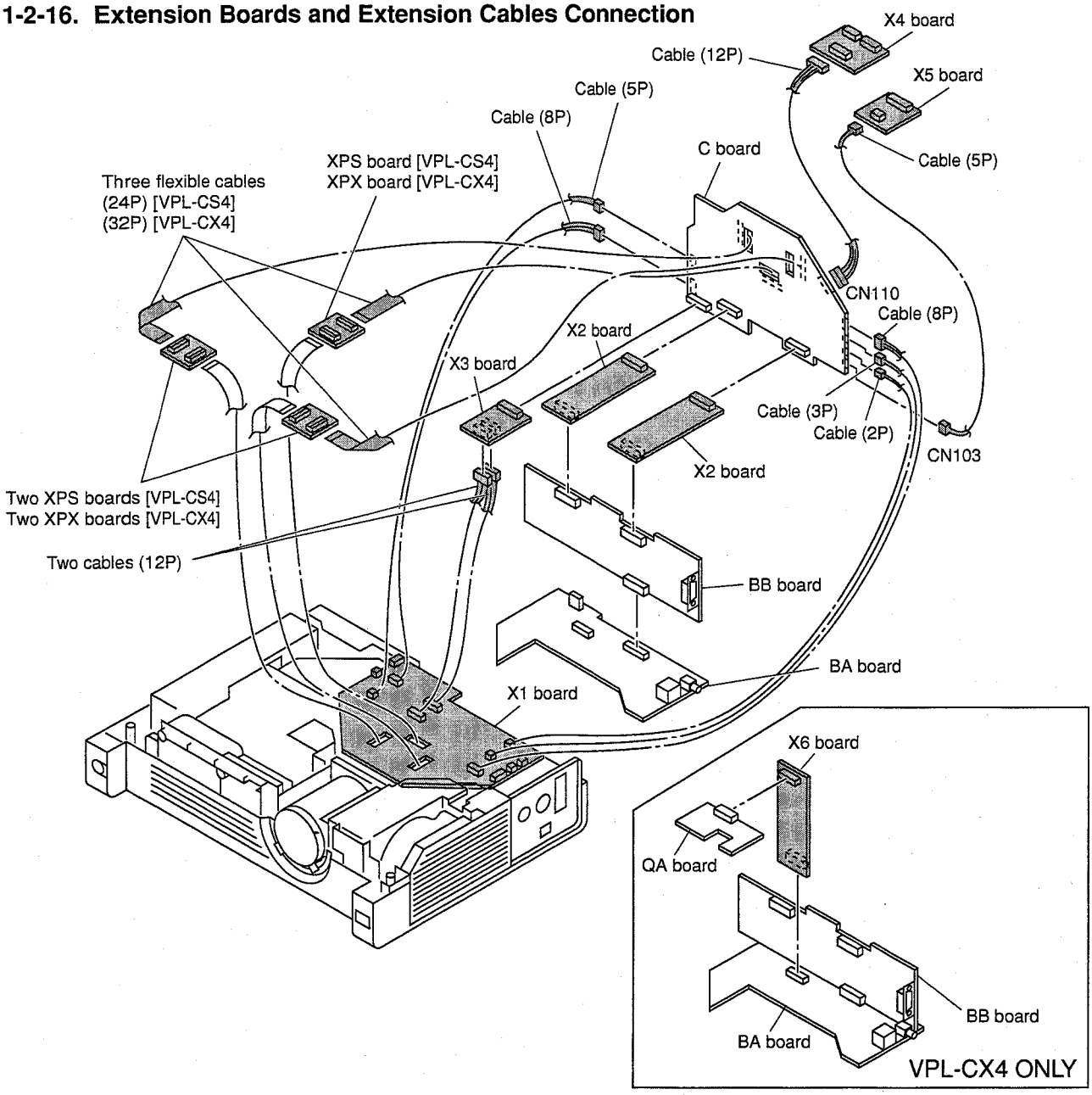

1-2-17. Warning on Power Connection

Use the appropriate rating cord and plug that are applied to local regulations as shown in below tables.

	The United States, Canada	Continental Europe	UK	Australia	Japan
Plug type	YP-11	YP-21	SP-61	B8	YP-13
Female end	YC-13L	YC-13L	YC-13L	C7-2	YC-13L
Cord type	SPT-2	H03VVH2-F	H03VVH2-F	H03VVH2-F	VFF
Rated Voltage & Current	10 A/125 V	2.5 A/250 V	2.5 A/250 V	2.5 A/250 V	7 A/125 V
Safety approval	UL/CSA	VDE	BS	SAA	DENAN

Section 2
Electrical Adjustments

2-1. Preparations

2-1-1. Equipment Required

- Oscilloscope
  Tektronix 2465 or equivalent
  (bandwidth: 350 MHz or more)
- NTSC, PAL, SECAM component signal generator
  Tektronix TG2000 + AVG1 (optional module) + AWVG1 (optional module) or equivalent
- VG (Programmable video signal generator)
  VG814 or equivalent
- Digital voltmeter
  Advantest TR6845 or equivalent
- Luminance meter

Note

Perform the following adjustments at least 5 minutes after turning on the power.

2-1-2. Optical Unit Adjustment

Drive the cooling fan and turn on the lamp.

1) Mirror Adjustment

Set the screen size to 80-inch at the wide-end.

1. Set the unit in green-only.
2. Adjust the blanking sections at the top, bottom, left, and right for minimum by moving the adjusting plate of the G dichromatics mirror.
3. Tighten the adjusting plate fixing screws.
4. Set the unit in cyan.
5. Adjust the blanking sections at the top, bottom, left, and right for minimum by moving the adjusting plate of the RB mirror, and then maximize the intensity of the blue.
6. Tighten the adjusting plate fixing screws.
7. Set the unit in all white.
8. Adjust the blanking sections at the top, bottom, left, and right for minimum by moving the adjusting plate of the RB mirror, and then maximize the intensity of the red.
9. Tighten the adjusting plate fixing screws.
10. Secure the six adjusting plate fixing screws using a torque screwdriver.
    Tightening torque: 8 kgf/cm
11. Make sure that the deviation of the lighting range is within the specific range.

2-1-3. Factory Mode Setting

1. Make sure that the MENU is indicated.
2. Exit the menu.
3. Press the keys in the following order:
   "ENTER" → "ENTER" → "LEFT" → "ENTER"
4. The message "Do you wish to enter into the FACTORY MODE? Yes:↑ No:↓ " will be displayed.
5. Select "Yes:↑".

Note

When leaving the FACTORY MODE, perform item 3. "Do you wish to return to the USER MODE? Yes:↑ No:↓ " will be displayed. Select "Yes:↑".

2-2. V-COM Adjustment

1. Input the green-only 30 IRE all white signal to INPUT-A.
2. Set the CONTRAST to 80 and BRIGHT to 50.
3. Set the screen to G VCOM adjustment of "Device Adjust."
   Adjust the G VCOM so that the vertical line on the screen is minimum.
4. Input the red-only and blue-only 30 IRE all white signal respectively and adjust R VCOM and B VCOM respectively so that the vertical line becomes minimum.
5. Save the value adjusted.

2-3. Adjustment Item Initialize Data

Menu Title	Item Name	Memory Name								
		Set Memory	CH Memory			Status Memory	W/B Memory			
			VIDEO	SVIDEO	INPUT-A		VIDEO HIGH	VIDEO LOW	RGB HIGH	RGB LOW
PICTURE CTRL	CONTRAST		80	80	80					
	BRIGHT		50	50	50					
	COLOR		50	50	50					
	HUE		50	50	50					
	SHARP		50	50	50					
	RGB ENHANCER		–	–	30					
	D.PICTURE		OFF	OFF	OFF					
	GAMMA MODE		–	–	GRAPHICS					
	COLOR TEMP		LOW	LOW	HIGH					
	COLOR SYS		AUTO	AUTO	AUTO					
	VOLUME		50	50	50					
INPUT SETTING	DOT PHASE					15 (*)				
	SIZE H					*				
	SHIFT					*				
	SCAN CONV					ON (*)				
	ASPECT					4 : 3 (*)				
	BLANKING					0 (*)				
SET SETTING	STATUS	ON								
	INPUT-A	COMPUTER								
	AUTO INPUT SEL	OFF								
	LANGUAGE	ENGLISH								
	POWER SAVING	OFF								
INSTALL SETTING	KEYSTONE MEMORY	OFF								
	DIGITAL KEYSTONE	0								
	MENU POSITION	CENTER								
	MENU COLOR	STANDARD								
	SIRCS RECEIVER	FRONT&REAR								
	LAMP TIMER	INDICATION ONLY								
INFORMATION	fH	INDICATION ONLY								
	fV	INDICATION ONLY								
	ROM Ver	INDICATION ONLY								
	OPERATION TIMER	INDICATION ONLY								
	PREVIOUS LAMP TIMER	INDICATION ONLY								

* : "DOT PHASE, SIZE H, SHIFT H/V, SCAN CONV, ASPECT and BLANKING" in the "INPUT SETTING" menu have an initial value respectively in accordance with the input signal (PRESET MEMORY No.).

Note : There are nonadjustable items in accordance with the input signal.

Menu Title	Item Name	Memory Name								
		Set Memory	CH Memory			Status Memory	W/B Memory			
			VIDEO	S VIDEO	INPUT-A		VIDEO HIGH	VIDEO LOW	RGB HIGH	RGB LOW
W/B ADJUST	GAIN R						170	175	170	175
	GAIN G						170	165	170	165
	GAIN B						170	160	170	160
	BIAS R						80	80	80	80
	BIAS G						80	80	80	80
	BIAS B						80	80	80	80

Note : There are nonadjustable items in accordance with the input signal.

Device Name	Item Name	Memory Name								Remarks
		Set Memory	Chroma Memory							
			NTSC 3.58/ NTSC 4.43/ B&W 60 Hz	PAL/PAL-M/ PAL-N/ SECAM/ B&W 50 Hz	15kRGB	Component (15k)	Double Speed Component	HDTV (YPbPr)	HDTV (GBR) includes Double Speed	
RGB MTRX/	CONTRAST	15								
	R DRIVE		9	9	9	9	9	9	9	Fixed Value
	G DRIVE		9	9	9	9	9	9	9	Fixed Value
	B DRIVE		9	9	9	9	9	9	9	Fixed Value
	SUB BRT	52								
	YUV CON		5	6	6	6	7	7	7	
	YUV COL		12	12	12	12	10	10	10	
	SUB HUE		8	8	8	8	7	7	7	
	CTI LVL		2	2	1	1	1	1	1	Fixed Value
	R-Y/R		12	11	11	11	13	13	13	Fixed Value
	R-Y/B		14	13	14	14	15	15	15	Fixed Value
	G-Y/R		8	7	7	7	8	8	8	Fixed Value
	G-Y/B		6	6	5	5	4	4	4	Fixed Value
	SUB SHP		2	2	3	3	3	3	3	Fixed Value
	SHPF0		2	2	2	2	1	1	1	Fixed Value
	PRE OVER		0	0	0	0	0	0	0	Fixed Value
	DMIC PIC	3								Fixed Value
	LTI LVL		1	1	1	1	0	0	0	Fixed Value
D.COM/	VENH	2								Fixed Value

Note : There are nonadjustable items in accordance with the input signal.

Device Name	Item Name	Memory Name									Remarks
		Set Memory		Chroma Memory							
		VPL-CS4	VPL-CX4	NTSC 3.58/ NTSC 4.43/ B&W 60 Hz	PAL/PAL-M/ PAL-N/ SECAM/ B&W 50 Hz	15kRGB	Component (15k)	Double Speed Component	HDTV (YPbPr)	HDTV (GBR) includes Double Speed	
CHROMA/	SHP GAIN			11	11	11	11	11	11	11	Fixed Value
	SHP EQ			0	0	0	0	0	0	0	Fixed Value
	SHP F0			2	2	2	2	2	2	2	Fixed Value
	Y-OUT LVL	17									
	C-OUT LVL	9									
	Y-DL	4									Fixed Value
	S B-Y ADJ	7									Fixed Value
	S R-Y ADJ	7									Fixed Value
	S-INHBT	0									Fixed Value
	S-ID	0									Fixed Value
	S GP	0									Fixed Value
	S V-ID	0									Fixed Value
	BELL F0	0									Fixed Value
	HPF	0									Fixed Value
P.DRV/	OFFSET R(E)	168									Fixed Value
	OFFSET (GE)	168									Fixed Value
	OFFSET B(E)	168									Fixed Value
	VCOM R	55	80								
	VCOM G	55	80								
	VCOM B	55	80								
	SIG CEN	145	155								Fixed Value
	CALIB	138									Fixed Value
	INV CONT	1									Fixed Value
	SID LVL	105	206								Fixed Value
	PRG LVL	205	86								Fixed Value
SH/	SH1	11	5								Fixed Value
	SH2 R	220	212								Fixed Value
	SH2(G)	220	210								Fixed Value
	SH2 B	220	212								Fixed Value
VAMP/	CONT(E)	168									Fixed Value
	SUB CON R(E)	128									
	SUB CON G(E)	128									
	SUB CON B(E)	128									
	BRT(E)	203									Fixed Value

Note : There are nonadjustable items in accordance with the input signal.

Device Name	Item Name	Memory Name									Remarks
		Set Memory		Chroma Memory							
		VPL-CS4	VPL-CX4	NTSC 3.58/ NTSC 4.43/ B&W 60 Hz	PAL/PAL-M/ PAL-N/ SECAM/ B&W 50 Hz	15kRGB	Component (15k)	Double Speed Component	HDTV (YPbPr)	HDTV (GBR) includes Double Speed	
3D GAMMA/	SUB CONT	0									Fixed Value
	SUB BRT	0									Fixed Value
	R OSD LVL	31									Fixed Value
	G OSD LVL	31									Fixed Value
	B OSD LVL	31									Fixed Value
	THROUGH	0									Fixed Value
	SW	1									Fixed Value
	APC THRES	25									Fixed Value
	APC LIMIT	32									Fixed Value
OTHER/	H START	104	144								Fixed Value
	V START	22									Fixed Value
	H POSITION	21	13								Fixed Value
	TEMP LAMP	Non adjustable									Fixed Value
	TEMP PANEL	Non adjustable									Fixed Value
	LAMP FAN 1	Non adjustable									Fixed Value
	PANEL FAN 1	Non adjustable									Fixed Value
	LAMP FAN 2	Non adjustable									Fixed Value
	PANEL FAN 2	Non adjustable									Fixed Value
	SYNCHRONOUS	1									Fixed Value
GAMMA		Factory default setting value									

Note : There are nonadjustable items in accordance with the input signal.

2-4. Service Knowhow

2-4-1. After Replacing the Prism Block

1. Perform Section "2-2. V-COM Adjustment."
2. Perform the Gamma data writing of the Prism Block.
3. Perform Section "2-5. White Balance Adjustment on Servicing."

2-4-2. After Replacing the Board

- Refer to the cross table shown on right.
- There are no need to perform the adjustment when the board other than the BA board or C board had been replaced.

1) When Replacing the BA Board

When the data before replacement can be read properly

1. Make a note of the data before replacement. After replacement, write the data into the new board with service mode.
2. If the white balance is extremely deteriorated, perform the white balance adjustment (Refer to Section 2-5.).

When the data before replacement *cannot* be read

1. Perform Section "2-2. V-COM Adjustment."
2. Perform Section "2-5. White Balance Adjustment on Servicing."

2) When Replacing the C Board

1. Before replacement, unsolder the IC208 from the replaced C board and then mount it to the new board.
2. Perform Section "2-2. V-COM Adjustment."
3. If the white balance is extremely deteriorated, perform the white balance adjustment (Refer to Section 2-5.).

3) When Replacing the Other Board

There are no need to perform the adjustment.

Cross Table of Board Replacement

Device Name	Item Name	Board Name	
		BA	C
P.DRV	VCOM (R)	*	O
	VCOM (G)	*	O
	VCOM (B)	*	O
VAMP	CONT (E)	*	O
	SUB CON R (E)	*	O
	SUB CON B (E)	*	O
W/B ADJUST			
INPUT-A HIGH	GAIN R	*	O
	GAIN G	*	O
	GAIN B	*	O
	BIAS R	*	O
	BIAS G	*	O
	BIAS B	*	O
INPUT-A LOW	GAIN R	*	O
	GAIN G	*	O
	GAIN B	*	O
	BIAS R	*	O
	BIAS G	*	O
	BIAS B	*	O
VIDEO HIGH	GAIN R	*	O
	GAIN G	*	O
	GAIN B	*	O
	BIAS R	*	O
	BIAS G	*	O
	BIAS B	*	O
VIDEO LOW	GAIN R	*	O
	GAIN G	*	O
	GAIN B	*	O
	BIAS R	*	O
	BIAS G	*	O
	BIAS B	*	O

* : When down the data before replacement, and then write in the data after the board replacement.

O : Need adjustment

Value : See description.

2-5. White Balance Adjustment on Servicing

2-5-1. Signal Level Adjustment

1. Input the 95 IRE and 100 IRE signals to INPUT-A.
2. Warm up the unit at least 10 minutes.

   Then enter the Service mode.

   Press the keys in the following order.
   "ENTER"→"ENTER"→"↑"→"↓"→"ENTER"
   The message "Do you wish to enter into the SERVICE MODE? Yes:↑ No:↓ " will be displayed.
   Select "Yes:↑".

   Note

   When leaving the SERVICE MODE, perform the key operations of item 2, "Do you wish to return to the USER MODE? Yes:↑ No:↓ " will be displayed. Select "Yes:↑".

3. Set the unit in G-only mode.
4. Enter the P.DRV on the MENU screen by the DEV. ADJ.
5. Discriminate the 95 IRE and 100 IRE by the V-AMP/CONT (E) controls of the P.DRV.
6. Set the unit in Red-only mode.
7. Discriminate the 95 IRE and 100 IRE by the V-AMP/SUB CON R (E) controls of the P.DRV.
8. Set the unit in Blue-only mode.
9. Discriminate the 95 IRE and 100 IRE by the V-AMP/SUB CON B (E) controls of the P.DRV.

2-5-2. White Balance Adjustment

1) HIGH Mode of INPUT-A

Input the 10 STEP signal to INPUT-A, and observe the chromaticity of each luminance.
When varying the chromaticity of each luminance, perform the following adjustments.

1. Input the 100 IRE FLAT FIELD signal to INPUT-A.
2. Measure the chromaticity (x, y).
3. Input the 80 IRE FLAT FIELD signal to INPUT-A.
4. Adjust the chromaticity (x, y) to the values measured in step 2. by the VAMP/SUB CON R (E) and B (E) of the P. DRV.
5. Change the INPUT signal to the 30 IRE.
6. Adjust the chromaticity (x, y) to the values measured in step 2. by the HIGH mode BIAS R, B of W/B.
7. Change the INPUT signal to the 80 IRE.
8. Adjust the chromaticity (x, y) to the values measured in step 2. by the GAIN R, B.
9. Repeat above steps 5. to 8. until the chromaticity become the following values.
   $x \pm 0.002$, $y \pm 0.004$ (The x and y are the values measured in step 2.)

2) LOW Mode of INPUT-A

1. Input the 80 IRE FLAT FIELD signal to INPUT-A.
2. Set the GAIN G to HIGH mode value at "−25" with the LOW mode of the W/B. Set GAIN to HIGH mode value at "+15".
3. Set the GAIN B that is equal to HIGH mode value.
4. Set the BIAS R, G and B that are equal to HIGH mode values.
5. Measure the chromaticity (x, y).
6. Input the 30 IRE FLAT FIELD signal to INPUT-A.
7. Adjust the chromaticity (x, y) to the values measured in step 5. by the BIAS G and B of the LOW mode of the W/B.
8. Input the 80 IRE signal to INPUT-A.
9. Adjust the chromaticity (x, y) to the values measured in step 5. by GAIN G and B.
10. Repeat above steps 6. to 9. until the chromaticity become the following values.
    $x \pm 0.002$, $y \pm 0.004$ (The x and y are the values measured in step 5.)

3) HIGH Mode of VIDEO

1. Input the VIDEO signal of NTSC or PAL.
2. Set the GAIN G to HIGH mode value at "−15" with the INPUT-A HIGH mode of the W/B.
   Set the BIAS G to INPUT-A HIGH mode at "−5".
3. Set the GAIN R, B and BIAS R, B that are equal to INPUT-A HIGH mode values.

4) LOW Mode of VIDEO

1. Input the VIDEO signal of NTSC or PAL.
2. Set the GAIN G to LOW mode value at "−15" with the INPUT-A LOW mode of the W/B.
   Set the BIAS G to INPUT-A LOW mode at "−5".
3. Set the GAIN R, B and BIAS R, B that are equal to INPUT-A LOW mode values.

2-6. Memory

Memory structure consists of the following five memory blocks.

1. Set memory
2. Status memory
3. Channel memory
4. Chroma memory
5. W/B memory

CPU internal ROM : 256 kbyte Flash Memory
CPU internal ROM : 16 kbyte
External NVM memory : 8 kbyte EEPROM

Gamma mode functions are actualized by offsetting the output values to the Contrast and Brightness devices.
When the power plug is connected to the power line (Standby status), all data inside the internal ROM are written into the NVM (Nonvolatile Memory). When the power is turned to on, required data for the current picture, such as status memory data, etc., are selected, and they are written into the internal RAM.
When adjustment is carried out, adjustment data are written into the NVM automatically (items on the user mode) or by the trigger of memory operation (items on the service mode and factory mode), then stored them.
Adjustable items (W/B and Device Adjust) of the service mode and factory mode are memorized into the NVM by the memory operation. At the same time, the factory preset (adjusted) data are all eliminated from the memory.

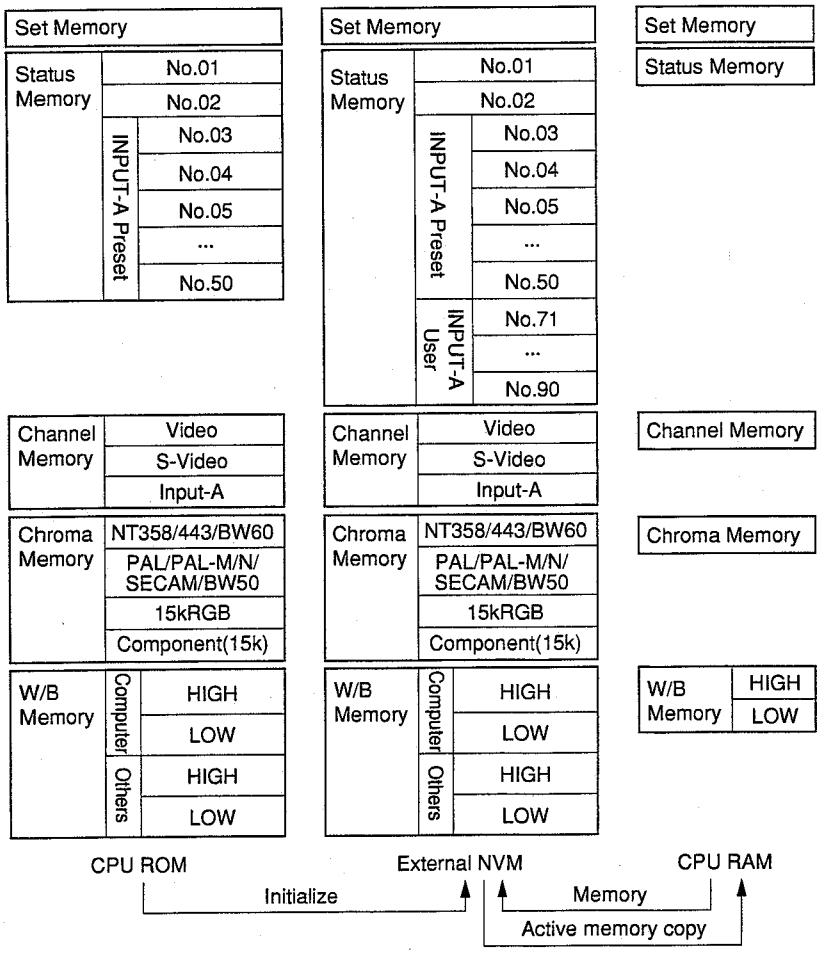

Section 3
Semiconductors

24LC21AT/SN
BA033F-E2
IRMF-A0T-QTP
LT1374IS8#TR
M24C64-WMN6T(A)
NJM062M
NJM2073M(TE2)
ST24FC21M6TR
TA75W393FU
TA75W393FU(TE12R)
TC7W14FU(TE12R)
TC7WH123FU(TE12R)
TC7WH74FU(TE12R)
TL431BCDR2

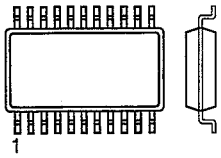

TOP VIEW

8PIN SOP

CXA1875AM-T4

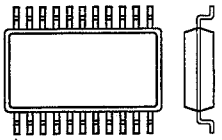

TOP VIEW

16PIN SOP

74VHC02MTCX
74VHC125MTCX
TC74LCX125FT(EL)

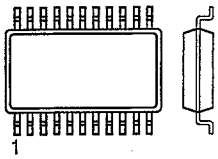

TOP VIEW

14PIN SOP

74VHC240MTCX
74VHCT541AMTCX
CXA1846BN-T4
MK1714-01RT
M52347FP-TE
SN74AHCT541PWR
TC74VHCT541AFT(EL)

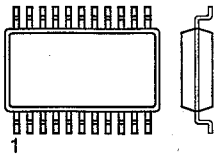

TOP VIEW

20PIN SOP

AD9884AKS-100
AD9884AKS-140

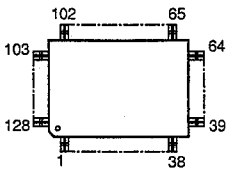

TOP VIEW

ADV7123KST140

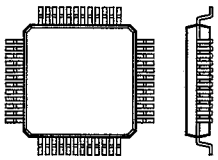

TOP VIEW

48PIN QFP

BA05FP-E2
L88M05T-FA-TL

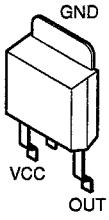

BA12FP-E2

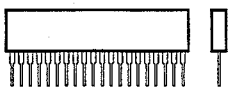

MARKING SIDE VIEW

10PIN SIP

CXA2101AQ-TL

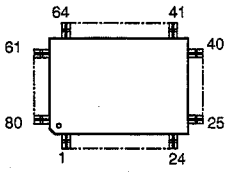

TOP VIEW

CXA2123AQ-T6

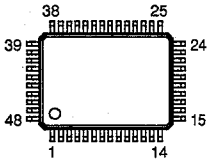

TOP VIEW

CXA3512R-T6

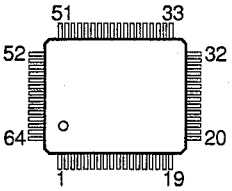

TOP VIEW

CXD2064Q-T6

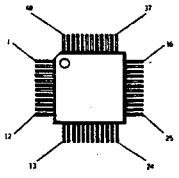

CXD9607GB

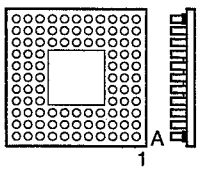

BOTTOM VIEW

144PIN PPBGA

HD64F2633TE

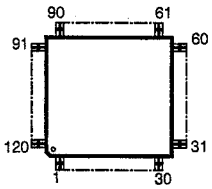

TOP VIEW

IS61LV6416-15T(T&R)

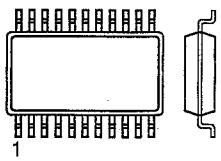

TOP VIEW

44PIN TSOP

LM4041DIM3-1.2(T&R)

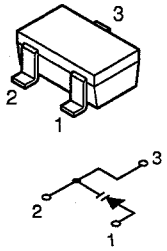

LM7131BCM5X

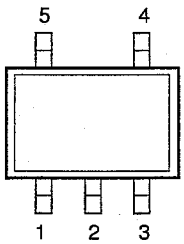

LP2985IM5X-3.3
TC75S56F(TE85R)
TC7S04FU(TE85R)
TC7S08FU(TE85R)
TC7SET08FU(TE85R)
TC7W04FU
TC7W04FU(TE12R)

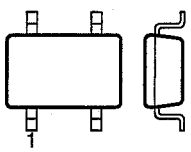

TOP VIEW

5PIN CHIP

M52749FP-TP

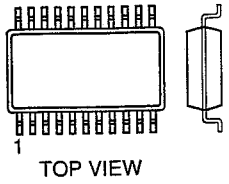

42PIN SOP

M52758FP

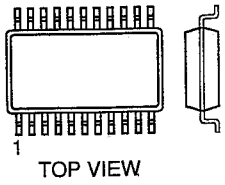

36PIN SOP

M62392FP

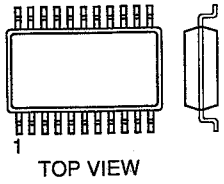

24PIN SOP

MBM29LV400TC-70PFTN
-SX-1730

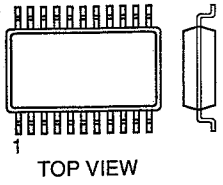

48PIN SOP

MCZ3001D

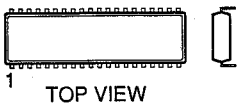

18PIN DIP

MD1320N
MD1320N-TA

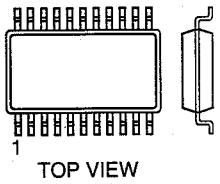

32PIN SSOP

MZ1540

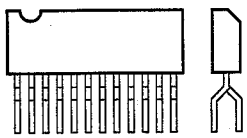

10PIN ZIP

PC123F2
PC123FY2

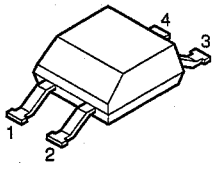

PQ20VZ1U

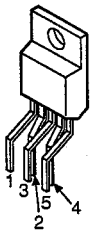

1: DC IN
2: ON/OFF CTL
3: DC OUT
4: DC OUT ADJ
5: GND

PQ2TZ15U

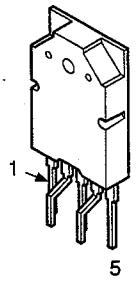

PW164-10RS

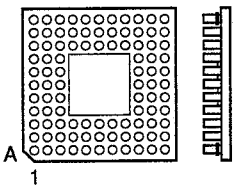

BOTTOM VIEW

256PIN TBGA

RCV4-A1T-MASK-25
ST72T631K4M1-XX

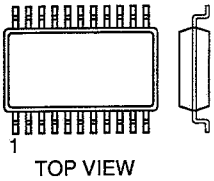

TOP VIEW

34PIN SOP

RS-140-T

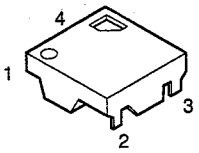

S-80828ANNP-EDR
S-80828ANNP-EDR-T2
S-80842ANNP-ED6
S-80842ANNP-ED6-T2

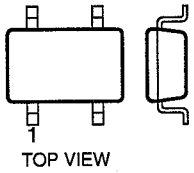

TOP VIEW

4PIN CHIP

TA78M09F(TE16L)

TCWH04FU(TE12R)

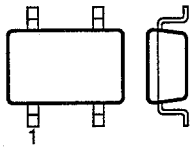

8PIN CHIP

TK11900MTL

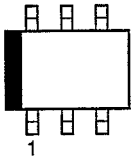

TOP VIEW

UPD72012GB-003-3B4

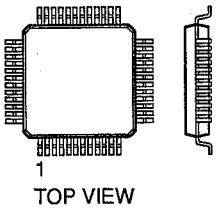

TOP VIEW

44PIN QFP

2SA1037AK-T146-QR
2SA1162-G
2SA1162-YG-TE85L
2SA1462-Y33
2SA1462-T1Y33Y34
2SA1611-M5M6
2SA1611T1-M5M6
2SC2712-YG
2SC2712-YG-TE85L
2SC3326N-TE85L-AB
2SC3326N-A
DTA144EUA-T106
DTC114EU
DTC114EUA-T106
DTC144EKA
DTC144EKA-T146
DTC144EUA-T106

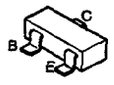

2SA1213Y-TE12L

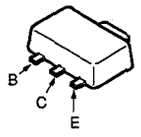

2SJ530S-TL

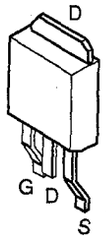

2SK2876-01MR-F119

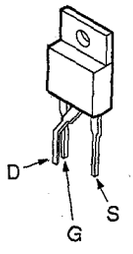

HN1B01FU-TE85R
HN1C01FU-TE85R

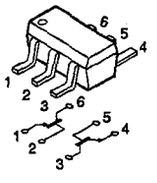

XP4501

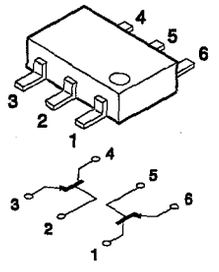

Diode

1SS226
MA157-TX

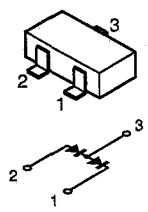

DF10SC6

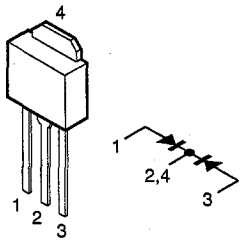

GP1U28Y

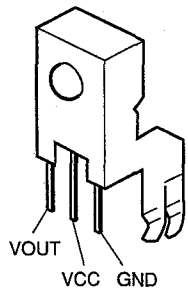

RM11C
RM11C-V1

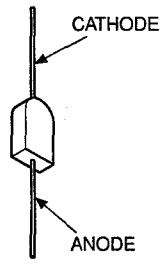

1SS355TE-17
HN1D03FU-TE85L
M1FL20U-4063
RB501V-40TE-17
RD5.6SB-T1
RD9.1S-B2
RD9.1SB2-T1

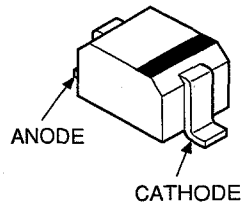

D1FS4A-TA
D2FS6-TA

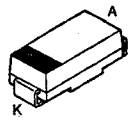

HN1D03FU-TE85R

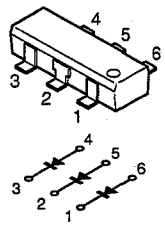

SEC1901C
SEC2422C

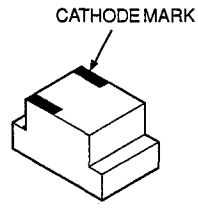

D6SB80

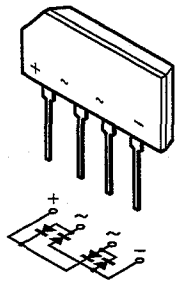

MA111-TX

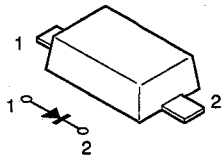

UDZSTE-173.9B

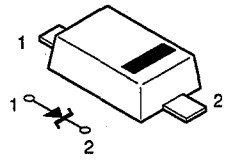

BZA456A

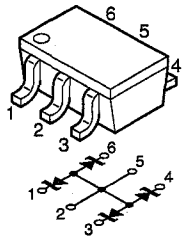

DAN202K
DAN202K-T-146

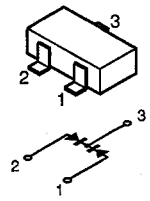

RD16M-B2
RD16M-T1B2
RD18M-T1B1
RD33M-B
RD33M-T1B
RD6.8M-B1
RD6.8M-T1B1

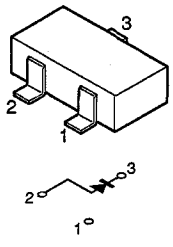

UF4005PKG23

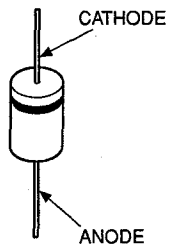

Section 4
Spare Parts

4-1. Notes on Repair Parts

1. Safety Related Components Warning

WARNING

The components identified marked ⚠ are critical for safety.
Replace only with the part number specified.

WARNHINWEIS

Les composants identifiés par une marque ⚠ sont critiques pour la sécurité.
Ne les remplacer que par une pièce portant le numéro spécifié.

2. Standardization of Parts

Some repair parts supplied by Sony differ from those used for the unit. These are because of parts commonality and improvement.
Parts List has the present standardized repair parts.

3. Stock of Parts

Parts marked with "o" at SP (Supply Code) column of the Spare Parts list may not be stocked. Therefore, the delivery date will be delayed.
Items with no part number and no description are not stocked because they are seldom required for routine service.

4. Units for Capacitors, Inductors and Resistors

The following units are assumed in Schematic Diagrams, Electrical Parts List and Exploded Views unless otherwise specified.

Capacitors	: μF
Inductors	: μH
Resistors	: Ω

4-2. Exploded Views

4-2-1. Cover

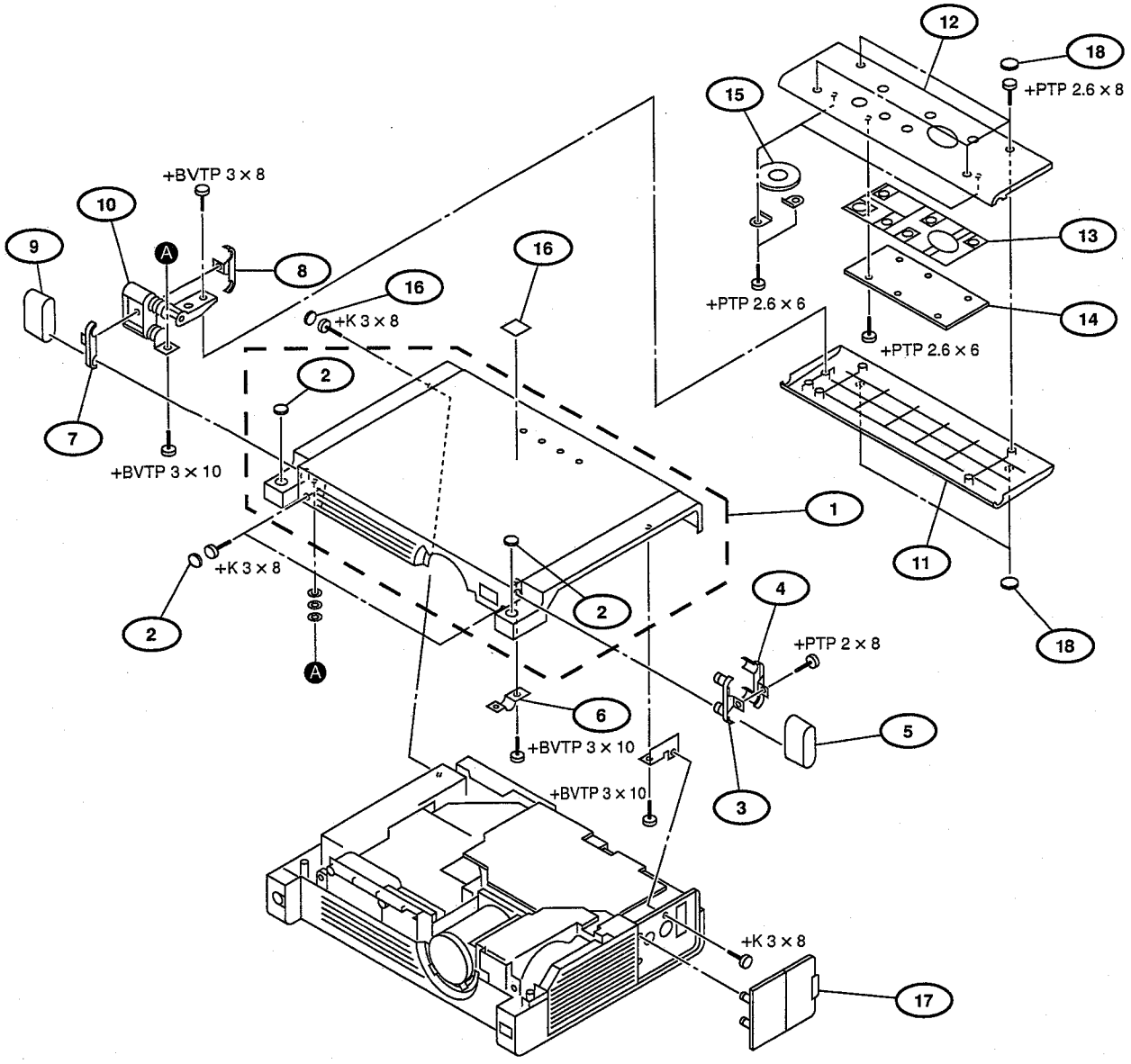

No.	Part No.	SP	Description
1	X-4038-904-1	s	HOOD ASSY
2	4-082-737-01	s	RUBBER, BLIND
	(Serial No. 10001 - 5000000 ;for VPL-CS4/CX4)		
	4-082-737-21	s	RUBBER, BLIND
	(Serial No. 5000001 - ;for VPL-CS4/CX4)		
3	4-082-821-02	s	COVER (RB), ARM SIDE
	(Serial No. 10001 - 5000000 ;for VPL-CS4/CX4)		
	4-082-821-11	s	COVER (RB), ARM SIDE
	(Serial No. 5000001 - ;for VPL-CS4/CX4)		
4	4-082-820-02	s	COVER (RA), ARM SIDE
	(Serial No. 10001 - 5000000 ;for VPL-CS4/CX4)		
	4-082-820-11	s	COVER (RA), ARM SIDE
	(Serial No. 5000001 - ;for VPL-CS4/CX4)		
5	4-082-796-02	s	COVER (R), ARM
	(Serial No. 10001 - 5000000 ;for VPL-CS4/CX4)		
	4-082-796-11	s	COVER (R), ARM
	(Serial No. 5000001 - ;for VPL-CS4/CX4)		
6	4-082-800-02	o	HOLDER, ARM
	(Serial No. 10001 - 5000000 ;for VPL-CS4/CX4)		
	4-082-800-11	o	HOLDER, ARM
	(Serial No. 5000001 - ;for VPL-CS4/CX4)		
7	4-082-799-01	s	COVER (LB), ARM SIDE
	(Serial No. 10001 - 5000000 ;for VPL-CS4/CX4)		
	4-082-799-11	s	COVER (LB), ARM SIDE
	(Serial No. 5000001 - ;for VPL-CS4/CX4)		
8	4-082-798-02	s	COVER (LA), ARM SIDE
	(Serial No. 10001 - 5000000 ;for VPL-CS4/CX4)		
	4-082-798-11	s	COVER (LA), ARM SIDE
	(Serial No. 5000001 - ;for VPL-CS4/CX4)		
9	4-082-797-02	s	COVER (L), ARM
	(Serial No. 10001 - 5000000 ;for VPL-CS4/CX4)		
	4-082-797-11	s	COVER (L), ARM
	(Serial No. 5000001 - ;for VPL-CS4/CX4)		
10	4-082-818-11	s	HINGE UNIT
11	4-082-829-02	s	COVER (A), FRONT
12	4-082-828-02	s	COVER (B), FRONT
13	4-082-819-01	s	BUTTON
14	A-1300-316-A	s	MOUNTED CIRCUIT BOARD, H
	(Serial No. 10001 - 5000000 ;for VPL-CX4)		
	A-1375-219-A	s	MOUNTED CIRCUIT BOARD, H
	(Serial No. 10001 - 5000000 ;for VPL-CS4)		
	A-1375-224-A	s	MOUNTED CIRCUIT BOARD, H
	(Serial No. 5000001 - ;for VPL-CS4/CX4)		
15	1-544-798-11	s	SPEAKER (2.8 CM)
16	4-085-853-01	s	EMBLEM (CS4)
	(Serial No. 10001 - 5000000 ;for VPL-CS4)		
	4-085-845-01	s	EMBLEM (CX4)
	(Serial No. 10001 - 5000000 ;for VPL-CX4)		
	4-085-924-01	s	EMBLEM (CS4)
	(Serial No. 5000001 - ;for VPL-CS4)		
	4-085-927-01	s	EMBLEM (CX4)
	(Serial No. 5000001 - ;for VPL-CX4)		
17	4-082-813-01	s	COVER, CONNECTOR
	(Serial No. 10001 - 5000000 ;for VPL-CS4/CX4)		
	4-082-813-11	s	COVER, CONNECTOR
	(Serial No. 5000001 - ;for VPL-CS4/CX4)		
18	4-082-737-11	s	RUBBER, BLIND
	(Serial No. 10001 - 5000000 ;for VPL-CS4/CX4)		
	4-082-737-31	s	RUBBER, BLIND
	(Serial No. 5000001 - ;for VPL-CS4/CX4)		
	7-685-646-79	s	+BVTP 3x8
	7-685-647-79	s	+BVTP 3x10
	7-685-133-19	s	+PTP 2.6x6
	7-685-134-19	s	+PTP 2.6x8
	7-685-105-19	s	+PTP 2x8
	7-682-248-04	s	+K 3x8

4-2-2. Chassis

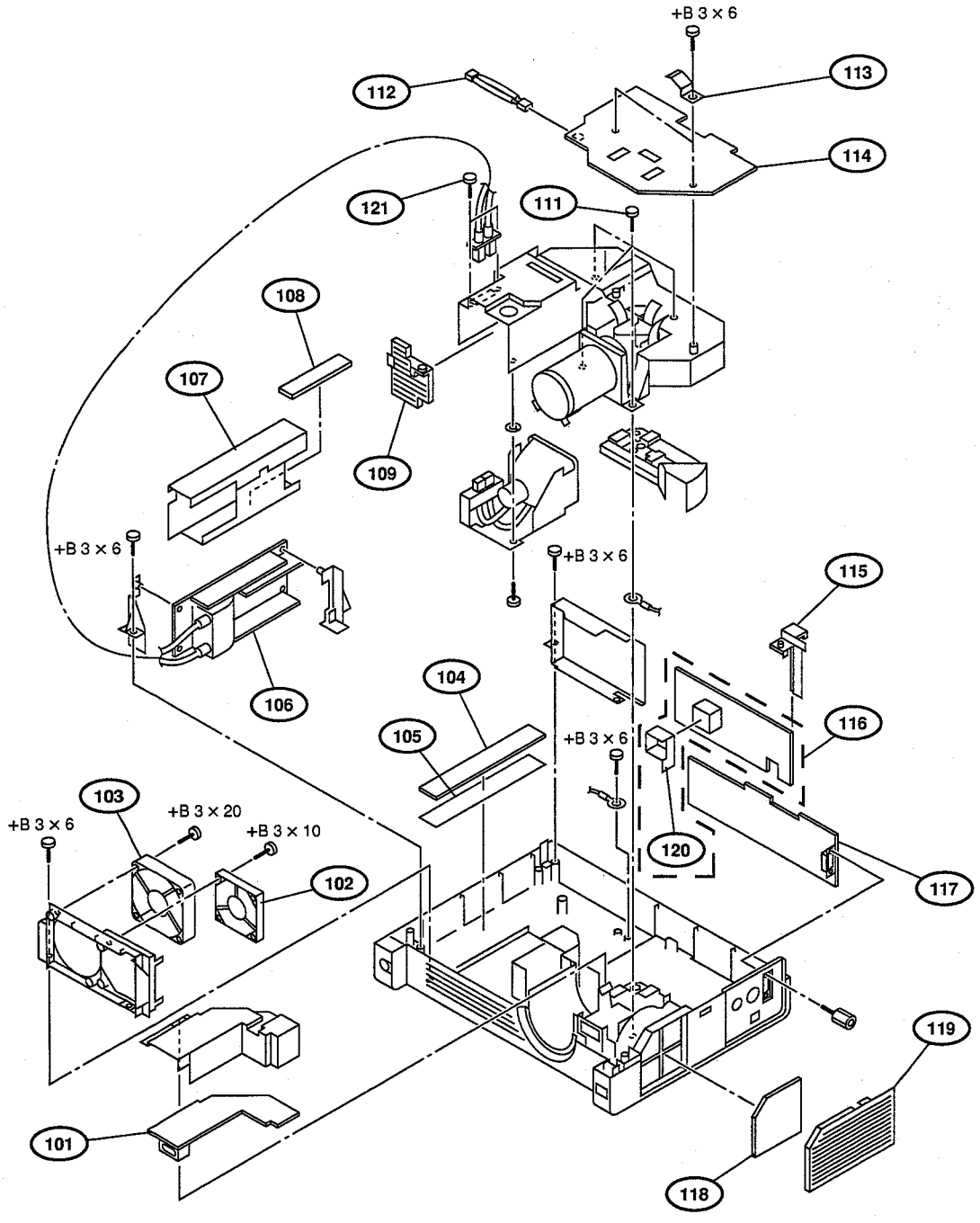
+B 3 × 6
112
113
114
121
111
108
107
109
+B 3 × 6
+B 3 × 6
115
106
104
105
+B 3 × 6
116
103
+B 3 × 6
+B 3 × 20
+B 3 × 10
120
102
117
119
101
118

No.	Part No.	SP	Description
101	A-1245-603-A	s	MOUNTED CIRCUIT BOARD, F
	(Serial No. 10001 - 5000000 ;for VPL-CS4)		
	A-1245-604-A	s	MOUNTED CIRCUIT BOARD, F
	(Serial No. 5000001 - ;for VPL-CS4/CX4)		
	A-1245-603-A	s	MOUNTED CIRCUIT BOARD, F
	(Serial No. 10001 - 12050 ;for VPL-CX4)		
	A-1300-308-A	s	MOUNTED CIRCUIT BOARD, F
	(Serial No. 12051 - 5000000 ;for VPL-CX4)		
102	1-763-693-11	s	FAN, DC
103	1-763-694-12	s	FAN, DC
104	A-1316-569-A	s	MOUNTED CIRCUIT BOARD, GC
	(Serial No. 10001 - 12050 ;for VPL-CX4)		
	A-1300-311-A	s	MOUNTED CIRCUIT BOARD, GC
	(Serial No. 12051 - 5000000 ;for VPL-CX4)		
	A-1316-569-A	s	MOUNTED CIRCUIT BOARD, GC
	(Serial No. 10001 - 5000000 ;for VPL-CS4)		
	A-1316-577-A	s	MOUNTED CIRCUIT BOARD, GC
	(Serial No. 5000001 - ;for VPL-CS4/CX4)		
105	4-082-742-01	s	SHEET (GC)
	(Serial No. 10001 - 5000000 ;for VPL-CS4/CX4)		
	4-082-742-11	s	SHEET (GC)
	(Serial No. 5000001 - ;for VPL-CS4/CX4)		
106	⚠ 1-468-600-11	s	POWER BLOCK (LAMP)
107	4-082-815-01	o	SHEET (LPS)
	(Serial No. 10001 - 5000000 ;for VPL-CS4/CX4)		
	4-082-815-11	o	SHEET (LPS)
	(Serial No. 5000001 - ;for VPL-CS4/CX4)		
108	4-082-740-01	s	SHEET (A), HEAT
109	4-082-804-02	o	PLATE, LIGHT INTERCEPTION
111	4-083-075-01	s	SCREW, MACHINE (+) P M4 x 10
112	⚠ 1-900-222-47	s	CONNECTOR ASSY, FUSE 2P
113	4-082-741-01	s	SPRING (C), GROUND
	(Serial No. 10001 - 5000000 ;for VPL-CS4/CX4)		
	4-082-741-11	s	SPRING (C), GROUND
	(Serial No. 5000001 - ;for VPL-CS4/CX4)		
114	A-1300-136-A	s	MOUNTED CIRCUIT BOARD, C
	(Serial No. 10001 - 5000000 ;for VPL-CS4)		
	A-1300-137-A	s	MOUNTED CIRCUIT BOARD, C
	(Serial No. 5000001 - ;for VPL-CS4)		
	A-1300-315-A	s	MOUNTED CIRCUIT BOARD, C
	(Serial No. 10001 - 5000000 ;for VPL-CX4)		
	A-1335-151-A	s	MOUNTED CIRCUIT BOARD, C
	(Serial No. 5000001 - ;for VPL-CX4)		
115	4-082-803-02	s	HOLDER (MS)
	(Serial No. 10001 - 5000000 ;for VPL-CS4/CX4)		
	4-082-803-11	s	HOLDER (MS)
	(Serial No. 5000001 - ;for VPL-CS4/CX4)		
116	A-1316-568-A	s	MOUNTED CIRCUIT BOARD, GB
	(Serial No. 10001 - 12050 ;for VPL-CX4)		
	A-1300-310-A	s	MOUNTED CIRCUIT BOARD, GB
	(Serial No. 12051 - 5000000 ;for VPL-CX4)		
	A-1316-568-A	s	MOUNTED CIRCUIT BOARD, GB
	(Serial No. 10001 - 5000000 ;for VPL-CS4)		
	A-1316-576-A	s	MOUNTED CIRCUIT BOARD, GB
	(Serial No. 5000001 - ;for VPL-CS4/CX4)		
117	A-1136-273-A	s	MOUNTED CIRCUIT BOARD, BB
	(Serial No. 5000001 - ;for VPL-CX4)		
	A-1136-275-A	s	MOUNTED CIRCUIT BOARD, BB
	(Serial No. 5000001 - ;for VPL-CS4)		
	A-1136-279-A	s	MOUNTED CIRCUIT BOARD, BB
	(Serial No. 10001 - 5000000 ;for VPL-CS4)		
	A-1136-277-A	s	MOUNTED CIRCUIT BOARD, BB
	(Serial No. 10001 - 12050 ;for VPL-CX4)		
	A-1300-312-A	s	MOUNTED CIRCUIT BOARD, BB
	(Serial No. 12051 - 5000000 ;for VPL-CX4)		
118	4-082-730-01	s	FILTER
119	4-082-817-02	s	COVER, FILTER
	(Serial No. 10001 - 5000000 ;for VPL-CS4/CX4)		
	4-082-817-11	s	COVER, FILTER
	(Serial No. 5000001 - ;for VPL-CS4/CX4)		

No.	Part No.	SP	Description
120	4-083-244-01	s	SHEET (GB)
	(Serial No. 10001 - 5000000 ;for VPL-CS4/CX4)		
	4-083-244-11	s	SHEET (GB)
	(Serial No. 5000001 - ;for VPL-CS4/CX4)		
121	4-084-345-01	s	(+)P TAPPING SCREW B-0 (W)
	7-682-553-09	s	+B 3x20
	7-682-547-04	s	+B 3x6
	7-682-549-09	s	+B 3x10

4-2-3. Base

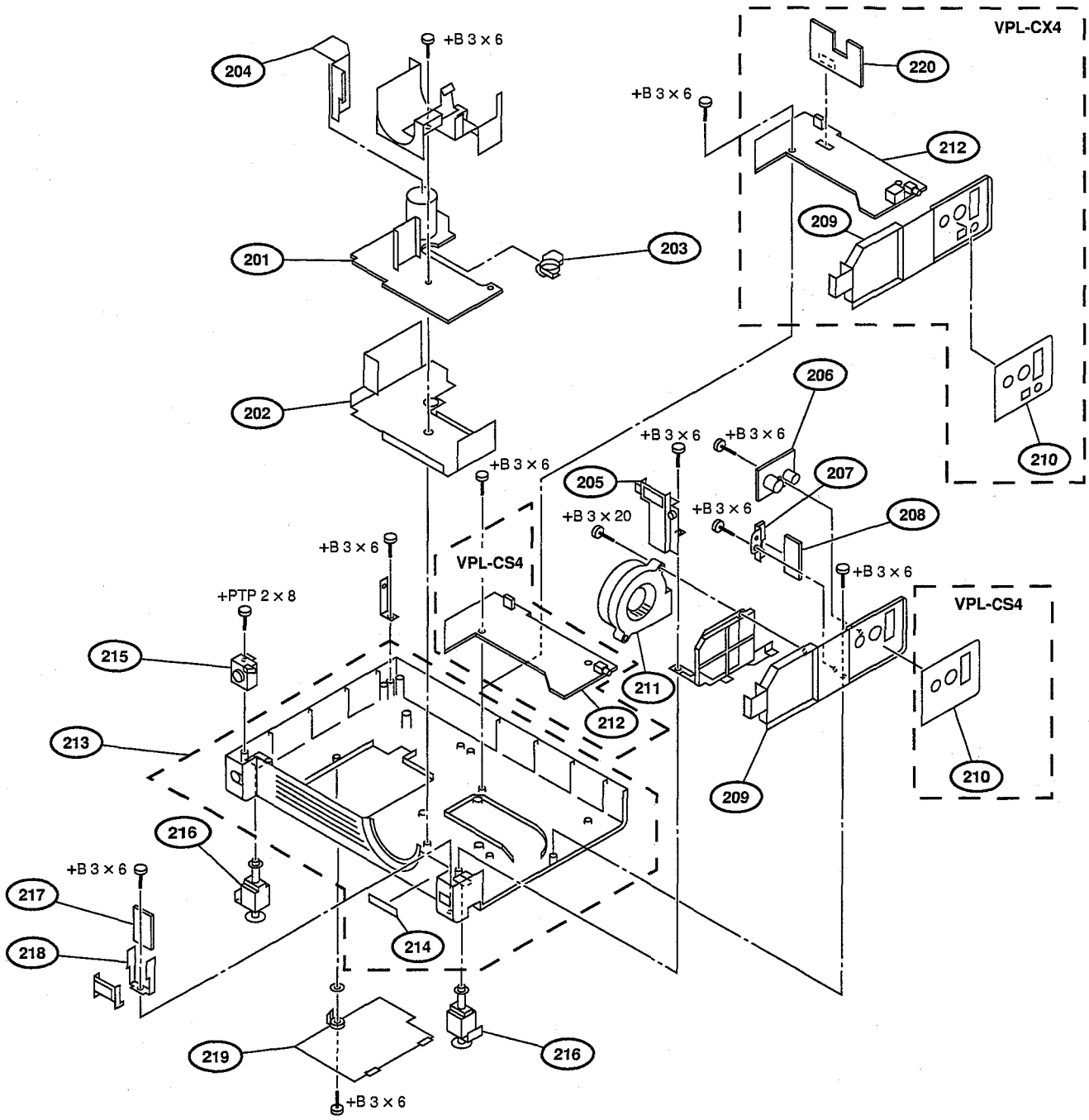
VPL-CX4
+B 3 × 6
204
220
+B 3 × 6
212
209
201
203
210
202
206
+B 3 × 6
+B 3 × 6
207
+B 3 × 6
205
+B 3 × 20
208
+B 3 × 6
VPL-CS4
+B 3 × 6
+PTP 2 × 8
VPL-CS4
215
211
212
213
210
209
216
+B 3 × 6
217
218
214
219
216
+B 3 × 6

No.	Part No.	SP	Description
201	A-1316-567-A	s	MOUNTED CIRCUIT BOARD, GA
	(Serial No. 10001 - 12050 ;for VPL-CX4)		
	A-1300-309-A	s	MOUNTED CIRCUIT BOARD, GA
	(Serial No. 12051 - 5000000 ;for VPL-CX4)		
	A-1316-567-A	s	MOUNTED CIRCUIT BOARD, GA
	(Serial No. 10001 - 5000000 ;for VPL-CS4)		
	A-1316-575-A	s	MOUNTED CIRCUIT BOARD, GA
	(Serial No. 5000001 - ;for VPL-CS4/CX4)		
202	4-082-814-01	o	SHEET (GA)
	(Serial No. 10001 - 5000000 ;for VPL-CS4/CX4)		
	4-082-814-11	o	SHEET (GA)
	(Serial No. 5000001 - ;for VPL-CS4/CX4)		
203	4-082-808-01	o	HOLDER (GA)
	(Serial No. 10001 - 5000000 ;for VPL-CS4/CX4)		
	4-082-808-11	o	HOLDER (GA)
	(Serial No. 5000001 - ;for VPL-CS4/CX4)		
204	4-082-788-02	s	SHEET (GA2)
	(Serial No. 10001 - 5000000 ;for VPL-CS4/CX4)		
	4-082-788-11	s	SHEET (GA2)
	(Serial No. 5000001 - ;for VPL-CS4/CX4)		
205	4-082-805-01	s	HOLDER (AC)
	(Serial No. 10001 - 5000000 ;for VPL-CS4/CX4)		
	4-082-805-11	s	HOLDER (AC)
	(Serial No. 5000001 - ;for VPL-CS4/CX4)		
206	A-1275-200-A	s	MOUNTED CIRCUIT BOARD, QB
	(Serial No. 10001 - 5000000 ;for VPL-CS4)		
	A-1275-207-A	s	MOUNTED CIRCUIT BOARD, QB
	(Serial No. 5000001 - ;for VPL-CS4/CX4)		
	A-1275-200-A	s	MOUNTED CIRCUIT BOARD, QB
	(Serial No. 10001 - 12050 ;for VPL-CX4)		
	A-1300-314-A	s	MOUNTED CIRCUIT BOARD, QB
	(Serial No. 12051 - 5000000 ;for VPL-CX4)		
207	4-082-809-01	o	HOLDER (V)
	(Serial No. 10001 - 5000000 ;for VPL-CS4/CX4)		
	4-082-809-11	o	HOLDER (V)
	(Serial No. 5000001 - ;for VPL-CS4/CX4)		
208	A-1342-599-A	s	MOUNTED CIRCUIT BOARD, V
	(Serial No. 10001 - 5000000 ;for VPL-CS4)		
	A-1342-615-A	s	MOUNTED CIRCUIT BOARD, V
	(Serial No. 5000001 - ;for VPL-CS4/CX4)		
	A-1400-543-A	s	MOUNTED CIRCUIT BOARD, V
	(Serial No. 10001 - 5000000 ;for VPL-CX4)		
209	4-081-968-02	o	PANEL, CONNECTOR
210	4-082-812-02	s	NAME LABEL, CONNECTOR
	(Serial No. 10001 - 5000000 ;for VPL-CS4)		
	4-082-812-11	s	NAME LABEL, CONNECTOR
	(Serial No. 5000001 - ;for VPL-CS4)		
	4-085-847-01	s	NAME LABEL, CONNECTOR
	(Serial No. 10001 - 5000000 ;for VPL-CX4)		
	4-085-925-01	s	NAME LABEL, CONNECTOR
	(Serial No. 5000001 - ;for VPL-CX4)		
211	1-763-695-11	s	FAN, DC
212	A-1300-098-A	s	MOUNTED CIRCUIT BOARD, BA
	(Serial No. 10001 - 5000000 ;for VPL-CS4)		
	A-1300-094-A	s	MOUNTED CIRCUIT BOARD, BA
	(Serial No. 5000001 - ;for VPL-CS4)		
	A-1136-278-A	s	MOUNTED CIRCUIT BOARD, BA
	(Serial No. 10001 - 12050 ;for VPL-CX4)		
	A-1300-313-A	s	MOUNTED CIRCUIT BOARD, BA
	(Serial No. 12051 - 5000000 ;for VPL-CX4)		
	A-1136-274-A	s	MOUNTED CIRCUIT BOARD, BA
	(Serial No. 5000001 - ;for VPL-CX4)		
213	X-4038-905-4	s	BASE ASSY
214	4-942-568-41	s	EMBLEM (NO.5) SONY
215	4-082-795-01	s	UNIT, OPEN BUTTON
216	4-082-802-01	s	ADJUSTER
217	A-1391-121-A	s	MOUNTED CIRCUIT BOARD, NF
	(Serial No. 10001 - 5000000 ;for VPL-CS4)		
	A-1391-147-A	s	MOUNTED CIRCUIT BOARD, NF
	(Serial No. 5000001 - ;for VPL-CS4/CX4)		
	A-1400-542-A	s	MOUNTED CIRCUIT BOARD, NF
	(Serial No. 10001 - 5000000 ;for VPL-CX4)		

No.	Part No.	SP	Description
218	4-082-811-01	o	HOLDER (NF)
	(Serial No. 10001 - 5000000 ;for VPL-CS4/CX4)		
	4-082-811-11	o	HOLDER (NF)
	(Serial No. 5000001 - ;for VPL-CS4/CX4)		
219	X-4038-903-1	s	LAMP COVER ASSY
	(Serial No. 10001 - 5000000 ;for VPL-CS4/CX4)		
	X-4039-469-1	s	LAMP COVER ASSY
	(Serial No. 5000001 - ;for VPL-CS4/CX4)		
220	A-1275-217-A	s	MOUNTED CIRCUIT BOARD, QA
	(Serial No. 5000001 - ;for VPL-CX4)		
	A-1300-317-A	s	MOUNTED CIRCUIT BOARD, QA
	(Serial No. 10001 - 5000000 ;for VPL-CX4)		
	7-682-553-09	s	+B 3x20
	7-682-547-04	s	+B 3x6
	7-685-105-19	s	+PTP 2x8

4-2-4. Optics 1

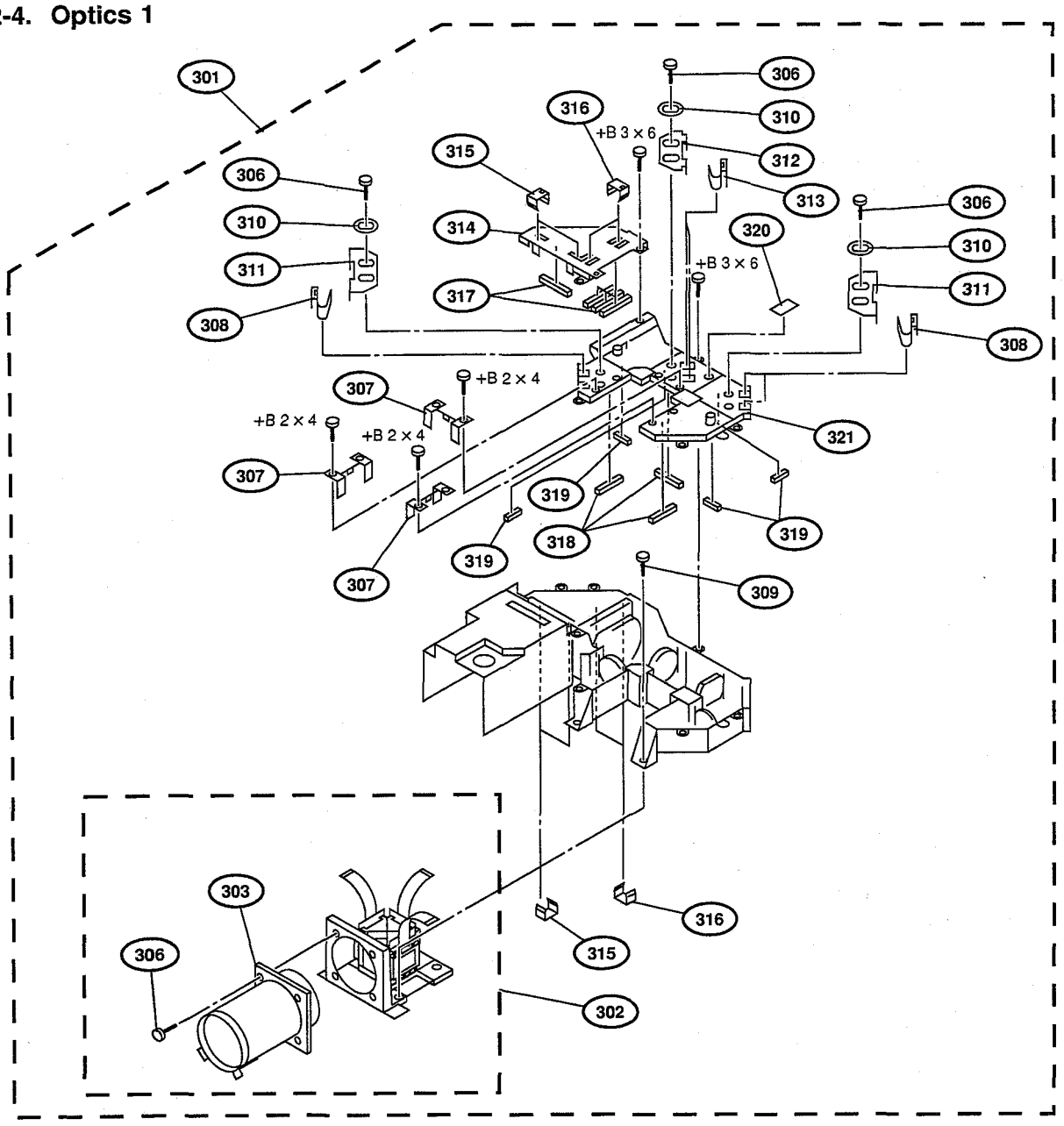

No.	Part No.	SP	Description
301	A-1501-951-A	s	OPTICS BLOCK ASSY (for VPL-CX4)
	A-1601-721-A	s	OPTICS BLOCK ASSY (for VPL-CS4)
302	A-1601-722-A	s	PRISM BLOCK ASSY (for VPL-CS4)
	A-1485-366-A	s	PRISM BLOCK ASSY (for VPL-CX4)
303	A-1501-908-A	s	PROJECTION LENS (for VPL-CS4)
	A-1501-950-A	s	PROJECTION LENS (for VPL-CX4)
306	4-074-474-01	s	SCREW, +BSW M3 x 8
307	4-082-784-01	o	HOLDER, IN-POLARIZER
308	4-074-405-01	o	FASTENER (RB)
309	4-082-759-01	s	SCREW, MACHINE (+) P M4 x 12
310	4-066-174-01	s	STOPPER (OPT), ROTATION
311	4-082-749-01	o	ADJUSTER, RB-MIRROR
312	4-082-750-01	o	ADJUSTMENT, G-MIRROR
313	4-082-748-01	o	FASTENER (G)
314	4-082-824-01	o	COVER (B), UNIT
315	4-082-744-01	o	SPRING (FY-PS)
316	4-082-754-01	o	SPRING (UV-FY)
317	4-082-763-01	o	STOPPER, P/S
318	4-082-764-01	o	STOPPER, CH CONDENSER
319	4-082-765-01	o	STOPPER, RELAY LENS-2
320	4-074-425-01	s	TAPE (A), SEAL
321	4-082-826-01	o	COVER (F), UNIT
	7-621-772-10	s	+B 2x4
	7-682-547-04	s	+B 3x6

4-2-5. Optics 2

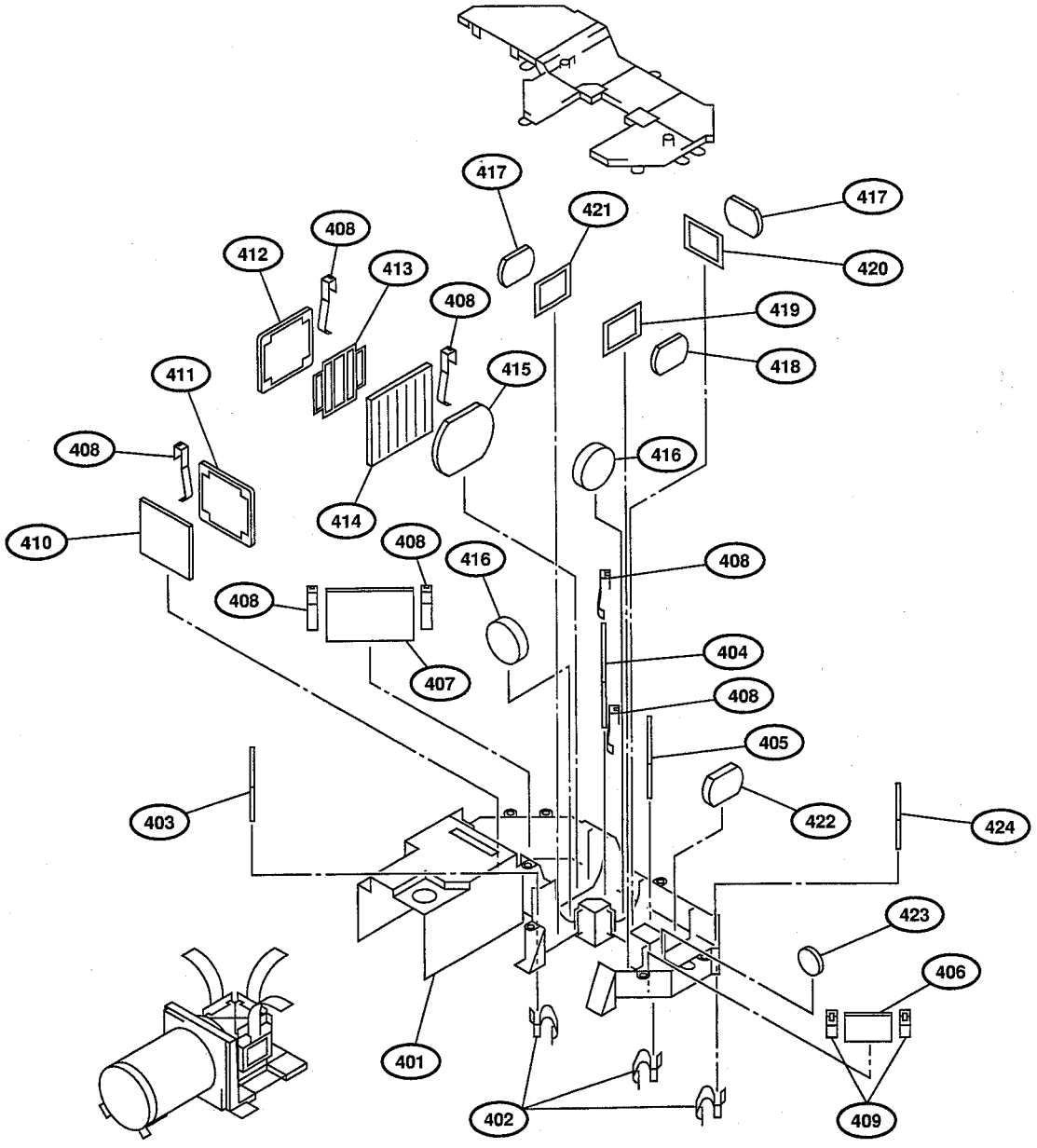

No.	Part No.	SP	Description
401	4-082-825-01	o	BASE, UNIT
402	4-066-172-01	s	FASTENER (OPT), MIRROR
403	4-082-773-01	o	MIRROR, B-CHANNEL
404	4-082-771-01	o	DICHROICMIRROR, B-REFRECT
405	4-082-772-01	o	DICHROICMIRROR, G-REFRECT
406	4-082-775-01	o	MIRROR, R-CHANNEL-2
407	4-082-768-01	o	MIRROR, WIDE BAND
408	4-082-745-01	o	SPRING (FY)
409	4-082-746-01	o	SPRING (R)
410	4-082-783-01	o	FILTER, UV-CUT
411	4-085-856-01	o	FLY EYE, LENSE-1
412	4-085-857-02	o	FLY EYE, LENSE-2
413	4-082-747-01	o	SLIT, P/S
414	A-1501-924-A	s	PS ASSY
415	4-082-778-01	o	LENS, MAIN CONDENSER

No.	Part No.	SP	Description
416	4-082-779-01	o	LENS, MAIN-2
417	4-082-766-01	o	LENS, GB-CH CONDENSER
418	4-082-767-01	o	LENS, R-CH CONDENSER
419	A-1501-911-A	s	IN-POLARIZER (R) ASSY
420	A-1501-912-A	s	IN-POLARIZER (G) ASSY
421	A-1501-913-A	s	IN-POLARIZER (B) ASSY
422	4-082-776-01	o	LENS, RELAY-1
423	4-082-777-01	o	LENS, RELAY-2
424	4-082-774-01	o	MIRROR, R-CHANNEL-1

4-3. Electrical Parts List

BA BOARD
---

*a:[Serial No. 10001 - 5000000 ;for VPL-CS4]
*b:[Serial No. 5000001 - ;for VPL-CS4]
*c:[Serial No. 10001 - 12050 ;for VPL-CX4]
*d:[Serial No. 12051 - 5000000 ;for VPL-CX4]
*e:[Serial No. 5000001 - ;for VPL-CX4]

Ref. No. or Q'ty	Part No.	SP	Description
1pc	*e A-1136-274-A	s	MOUNTED CIRCUIT BOARD, BA
1pc	*c A-1136-278-A	s	MOUNTED CIRCUIT BOARD, BA
1pc	*b A-1300-094-A	s	MOUNTED CIRCUIT BOARD, BA
1pc	*a A-1300-098-A	s	MOUNTED CIRCUIT BOARD, BA
1pc	*d A-1300-313-A	s	MOUNTED CIRCUIT BOARD, BA
C101	1-162-970-11	s	CAPACITOR CERAMIC 0.01MF/25V B
C102	1-164-217-11	s	CAPACITOR,CERAMIC 150PF/50V CH
C103	1-164-217-11	s	CAPACITOR,CERAMIC 150PF/50V CH
C104	1-113-985-11	s	CAPACITOR,TANTALUM 10MF/20V
C105	1-113-985-11	s	CAPACITOR,TANTALUM 10MF/20V
C106	1-128-004-11	s	CAPACITOR ELECT 10MF/16V(CHIP)
C107	1-107-826-11	s	CAPACITOR,CHIP CERAMIC 0.1MF
C108	1-125-891-11	s	CAPACITOR CERAMIC 0.47MF/10V
C109	1-162-970-11	s	CAPACITOR CERAMIC 0.01MF/25V B
C110	1-107-826-11	s	CAPACITOR,CHIP CERAMIC 0.1MF
C111	1-164-227-11	s	CAPACITOR,CERAMIC 0.022MF/25V
C112	1-162-970-11	s	CAPACITOR CERAMIC 0.01MF/25V B
C113	1-162-970-11	s	CAPACITOR CERAMIC 0.01MF/25V B
C114	1-107-826-11	s	CAPACITOR,CHIP CERAMIC 0.1MF
C115	1-125-838-11	s	CAPACITOR, CERAMIC 2.2MF/6.3V
C116	1-162-970-11	s	CAPACITOR CERAMIC 0.01MF/25V B
C117	1-126-205-11	s	CAPACITOR,ELECT 47M/6.3
C118	1-126-205-11	s	CAPACITOR,ELECT 47M/6.3
C119	1-162-970-11	s	CAPACITOR CERAMIC 0.01MF/25V B
C120	1-162-970-11	s	CAPACITOR CERAMIC 0.01MF/25V B
C121	1-162-915-11	s	CAPACITOR,CERAMIC 10PF/50V CH
C122	1-162-970-11	s	CAPACITOR CERAMIC 0.01MF/25V B
C123	1-125-837-11	s	CAPACITOR,CHIP CERAMIC1MF/6.3V
C124	1-124-779-00	s	CAPACITOR,ELECT 10MF/16V
C125	1-107-826-11	s	CAPACITOR,CHIP CERAMIC 0.1MF
C126	1-126-205-11	s	CAPACITOR,ELECT 47M/6.3
C127	1-107-826-11	s	CAPACITOR,CHIP CERAMIC 0.1MF
C128	1-125-837-11	s	CAPACITOR,CHIP CERAMIC1MF/6.3V
C129	1-107-826-11	s	CAPACITOR,CHIP CERAMIC 0.1MF
C130	1-109-982-11	s	CAPACITOR,CHIP CERAMIC 1MF/10V
C131	1-162-970-11	s	CAPACITOR CERAMIC 0.01MF/25V B
C132	1-162-970-11	s	CAPACITOR CERAMIC 0.01MF/25V B
C133	1-109-982-11	s	CAPACITOR,CHIP CERAMIC 1MF/10V
C134	1-109-982-11	s	CAPACITOR,CHIP CERAMIC 1MF/10V
C135	1-109-982-11	s	CAPACITOR,CHIP CERAMIC 1MF/10V
C136	1-162-970-11	s	CAPACITOR CERAMIC 0.01MF/25V B
C137	1-162-970-11	s	CAPACITOR CERAMIC 0.01MF/25V B
C138	1-115-566-11	s	CAPACITOR,CERAMIC 4.7MF B/6.3V
C139	1-107-826-11	s	CAPACITOR,CHIP CERAMIC 0.1MF
C140	1-107-826-11	s	CAPACITOR,CHIP CERAMIC 0.1MF
C141	1-107-826-11	s	CAPACITOR,CHIP CERAMIC 0.1MF
C142	1-162-970-11	s	CAPACITOR CERAMIC 0.01MF/25V B
C143	1-162-970-11	s	CAPACITOR CERAMIC 0.01MF/25V B
C144	1-107-826-11	s	CAPACITOR,CHIP CERAMIC 0.1MF
C145	1-107-826-11	s	CAPACITOR,CHIP CERAMIC 0.1MF
C146	1-107-826-11	s	CAPACITOR,CHIP CERAMIC 0.1MF
C147	1-128-004-11	s	CAPACITOR ELECT 10MF/16V(CHIP)
C148	1-128-004-11	s	CAPACITOR ELECT 10MF/16V(CHIP)
C149	1-107-826-11	s	CAPACITOR,CHIP CERAMIC 0.1MF

(BA BOARD)

Ref. No. or Q'ty	Part No.	SP	Description
C150	1-107-826-11	s	CAPACITOR,CHIP CERAMIC 0.1MF
C151	1-107-826-11	s	CAPACITOR,CHIP CERAMIC 0.1MF
C152	1-107-826-11	s	CAPACITOR,CHIP CERAMIC 0.1MF
C153	1-107-826-11	s	CAPACITOR,CHIP CERAMIC 0.1MF
C154	1-107-826-11	s	CAPACITOR,CHIP CERAMIC 0.1MF
C155	1-107-826-11	s	CAPACITOR,CHIP CERAMIC 0.1MF
C156	1-104-852-11	s	CAPACITOR,TANTALUM 22MF/10V
C157	1-107-826-11	s	CAPACITOR,CHIP CERAMIC 0.1MF
C158	1-107-826-11	s	CAPACITOR,CHIP CERAMIC 0.1MF
C159	1-107-826-11	s	CAPACITOR,CHIP CERAMIC 0.1MF
C160	1-117-681-11	s	CAPACITOR, ELECT 100MF/16V
C161	1-131-998-11	s	CAP, SOLID ELECT 82MF 6.3 V
C162	1-107-826-11	s	CAPACITOR,CHIP CERAMIC 0.1MF
C163	1-107-826-11	s	CAPACITOR,CHIP CERAMIC 0.1MF
C164	1-162-964-11	s	CAPACITOR,CERAMIC 1000PF/50V B
C165	1-164-227-11	s	CAPACITOR,CERAMIC 0.022MF/25V
C166	1-113-985-11	s	CAPACITOR,TANTALUM 10MF/20V
C167	1-128-004-11	s	CAPACITOR ELECT 10MF/16V(CHIP)
C168	1-128-004-11	s	CAPACITOR ELECT 10MF/16V(CHIP)
C169	1-128-004-11	s	CAPACITOR ELECT 10MF/16V(CHIP)
C201	1-128-004-11	s	CAPACITOR ELECT 10MF/16V(CHIP)
C202	1-126-204-11	s	CAPACITOR, ELECT 47MF/16V(CHIP
C203	1-107-826-11	s	CAPACITOR,CHIP CERAMIC 0.1MF
C204	1-107-826-11	s	CAPACITOR,CHIP CERAMIC 0.1MF
C205	1-107-826-11	s	CAPACITOR,CHIP CERAMIC 0.1MF
C206	1-107-826-11	s	CAPACITOR,CHIP CERAMIC 0.1MF
C207	1-107-826-11	s	CAPACITOR,CHIP CERAMIC 0.1MF
C208	1-107-826-11	s	CAPACITOR,CHIP CERAMIC 0.1MF
C209	1-107-826-11	s	CAPACITOR,CHIP CERAMIC 0.1MF
C210	1-126-204-11	s	CAPACITOR, ELECT 47MF/16V(CHIP
C211	1-107-826-11	s	CAPACITOR,CHIP CERAMIC 0.1MF
C216	1-125-891-11	s	CAPACITOR CERAMIC 0.47MF/10V
C218	1-125-891-11	s	CAPACITOR CERAMIC 0.47MF/10V
C220	1-125-891-11	s	CAPACITOR CERAMIC 0.47MF/10V
C221	1-125-891-11	s	CAPACITOR CERAMIC 0.47MF/10V
C222	1-125-891-11	s	CAPACITOR CERAMIC 0.47MF/10V
C223	1-107-823-11	s	CAPACITOR,CERAMIC 0.47MF/16V
C224	1-125-891-11	s	CAPACITOR CERAMIC 0.47MF/10V
C225	1-125-891-11	s	CAPACITOR CERAMIC 0.47MF/10V
C226	1-125-891-11	s	CAPACITOR CERAMIC 0.47MF/10V
C227	1-125-891-11	s	CAPACITOR CERAMIC 0.47MF/10V
C228	1-128-004-11	s	CAPACITOR ELECT 10MF/16V(CHIP)
C229	1-125-891-11	s	CAPACITOR CERAMIC 0.47MF/10V
C235	1-127-715-11	s	CAPACITOR,CERAMIC 0.22MF B1608
C237	1-107-823-11	s	CAPACITOR,CERAMIC 0.47MF/16V
C238	1-107-823-11	s	CAPACITOR,CERAMIC 0.47MF/16V
C239	1-162-970-11	s	CAPACITOR CERAMIC 0.01MF/25V B
C240	1-125-891-11	s	CAPACITOR CERAMIC 0.47MF/10V
C242	1-107-826-11	s	CAPACITOR,CHIP CERAMIC 0.1MF
C243	1-107-823-11	s	CAPACITOR,CERAMIC 0.47MF/16V
C244	1-107-826-11	s	CAPACITOR,CHIP CERAMIC 0.1MF
C245	1-126-204-11	s	CAPACITOR, ELECT 47MF/16V(CHIP
C246	1-107-826-11	s	CAPACITOR,CHIP CERAMIC 0.1MF
C247	1-162-964-11	s	CAPACITOR,CERAMIC 1000PF/50V B
C248	1-107-823-11	s	CAPACITOR,CERAMIC 0.47MF/16V
C250	1-128-004-11	s	CAPACITOR ELECT 10MF/16V(CHIP)
C251	1-107-823-11	s	CAPACITOR,CERAMIC 0.47MF/16V
C252	1-128-004-11	s	CAPACITOR ELECT 10MF/16V(CHIP)
C253	1-128-004-11	s	CAPACITOR ELECT 10MF/16V(CHIP)

(BA BOARD)

Ref. No. or Q'ty	Part No.	SP	Description
C254	1-128-004-11	s	CAPACITOR ELECT 10MF/16V(CHIP)
C301	1-109-982-11	s	CAPACITOR,CHIP CERAMIC 1MF/10V
C302	1-162-927-11	s	CAPACITOR,CERAMIC 100PF/50V CH
C303	1-109-982-11	s	CAPACITOR,CHIP CERAMIC 1MF/10V
C304	1-107-826-11	s	CAPACITOR,CHIP CERAMIC 0.1MF
C305	1-107-826-11	s	CAPACITOR,CHIP CERAMIC 0.1MF
C306	1-162-927-11	s	CAPACITOR,CERAMIC 100PF/50V CH
C307 *c	1-109-982-11	s	CAPACITOR,CHIP CERAMIC 1MF/10V
*d	1-109-982-11	s	CAPACITOR,CHIP CERAMIC 1MF/10V
*e	1-109-982-11	s	CAPACITOR,CHIP CERAMIC 1MF/10V
CN101	1-785-306-21	o	CONNECTOR, BOARD TO BOARD
CN102	1-779-806-21	s	CONNECTOR, 1.0MM PITCH 8P
CN301 *c	1-793-798-21	o	CONNECTOR, BOARD TO BOARD
*d	1-793-798-21	o	CONNECTOR, BOARD TO BOARD
*e	1-793-798-21	o	CONNECTOR, BOARD TO BOARD
D101	8-719-158-37	s	DIODE RD9.1SB2
D102	8-719-158-37	s	DIODE RD9.1SB2
D103	8-719-914-43	s	DIODE DAN202K
D201	8-719-914-43	s	DIODE DAN202K
D304 *c	8-719-083-58	s	DIODE UDZSTE-173.9B
*d	8-719-083-58	s	DIODE UDZSTE-173.9B
*e	8-719-083-58	s	DIODE UDZSTE-173.9B
D306 *c	8-719-083-58	s	DIODE UDZSTE-173.9B
*d	8-719-083-58	s	DIODE UDZSTE-173.9B
*e	8-719-083-58	s	DIODE UDZSTE-173.9B
FB101	1-414-235-22	s	INDUCTOR, FERRITE BEAD
FB102	1-414-235-22	s	INDUCTOR, FERRITE BEAD
FB103	1-500-245-11	s	BEAD, FERRITE (CHIP)
FB303 *c	1-469-185-11	s	INDUCTOR, FERRITE BEAD
*d	1-469-185-11	s	INDUCTOR, FERRITE BEAD
*e	1-469-185-11	s	INDUCTOR, FERRITE BEAD
FB305 *c	1-414-234-11	s	INDUCTOR,FERRITE BEAD
*d	1-414-234-11	s	INDUCTOR,FERRITE BEAD
*e	1-414-234-11	s	INDUCTOR,FERRITE BEAD
FB308 *c	1-469-185-11	s	INDUCTOR, FERRITE BEAD
*d	1-469-185-11	s	INDUCTOR, FERRITE BEAD
*e	1-469-185-11	s	INDUCTOR, FERRITE BEAD
FB309 *c	1-414-234-11	s	INDUCTOR,FERRITE BEAD
*d	1-414-234-11	s	INDUCTOR,FERRITE BEAD
*e	1-414-234-11	s	INDUCTOR,FERRITE BEAD
FB310 *c	1-216-295-91	s	CONDUCTOR, CHIP (2012)
*d	1-216-295-91	s	CONDUCTOR, CHIP (2012)
*e	1-216-295-91	s	CONDUCTOR, CHIP (2012)
FL101	1-239-899-21	s	FILTER, CHIP EMI
FL102	1-239-899-21	s	FILTER, CHIP EMI
FL103	1-239-899-21	s	FILTER, CHIP EMI
FL104	1-239-397-11	s	FILTER, LOW PASS (8MHZ)
FL105	1-239-397-11	s	FILTER, LOW PASS (8MHZ)
FL106	1-239-397-11	s	FILTER, LOW PASS (8MHZ)
FL201	1-239-899-21	s	FILTER, CHIP EMI
IC101	8-752-072-81	s	IC CXA1875AM
IC102	8-759-058-58	s	IC TC7S04FU-TE85R
IC103	8-759-058-58	s	IC TC7S04FU-TE85R
IC104	8-752-094-47	s	IC CXA2123AQ-T6
IC105	8-759-494-88	s	IC TC75S56F(TE85R)
IC106	8-752-390-37	s	IC CXD2064Q(T6)
IC202	8-752-086-33	s	IC CXA2101AQ-TL
IC205	8-759-277-63	s	IC TC7W14FU (TE12R)
IC207	8-759-335-28	s	IC TA78M09F (TE16L)
IC301	8-759-684-72	s	IC M24C64-WMN6T(A)

(BA BOARD)

Ref. No. or Q'ty	Part No.	SP	Description
IC302	8-759-681-47	s	IC IRMF-A0T-QTP
IC303	8-719-066-43	s	DIODE GP1U28Y
J101	1-566-822-21	s	JACK
J302 *c	1-779-677-11	s	CONNECTOR, USB (B)
*d	1-779-677-11	s	CONNECTOR, USB (B)
*e	1-779-677-11	s	CONNECTOR, USB (B)
L101	1-412-363-11	s	FERRITE, EMI (SMD)
L102	1-412-363-11	s	FERRITE, EMI (SMD)
L103	1-412-363-11	s	FERRITE, EMI (SMD)
L104	1-414-753-91	s	INDUCTOR 4.7UH
L105	1-414-753-91	s	INDUCTOR 4.7UH
L106	1-414-753-91	s	INDUCTOR 4.7UH
L107	1-414-753-91	s	INDUCTOR 4.7UH
L108	1-414-753-91	s	INDUCTOR 4.7UH
L109	1-414-235-22	s	INDUCTOR, FERRITE BEAD
L201	1-414-754-11	s	INDUCTOR 10.0UH
L202	1-414-754-11	s	INDUCTOR 10.0UH
L203	1-414-754-11	s	INDUCTOR 10.0UH
L204	1-414-754-11	s	INDUCTOR 10.0UH
Q101	8-729-013-28	s	TRANSISTOR HN1B01FU-TE85R
Q102	8-729-013-28	s	TRANSISTOR HN1B01FU-TE85R
Q103	8-729-013-28	s	TRANSISTOR HN1B01FU-TE85R
Q104	8-729-230-49	s	TRANSISTOR 2SC2712-YG
Q105	8-729-230-49	s	TRANSISTOR 2SC2712-YG
Q106	8-729-230-49	s	TRANSISTOR 2SC2712-YG
Q107	8-729-216-22	s	TRANSISTOR 2SA1162-G
Q108	8-729-216-22	s	TRANSISTOR 2SA1162-G
Q109	8-729-216-22	s	TRANSISTOR 2SA1162-G
Q203	8-729-216-22	s	TRANSISTOR 2SA1162-G
Q204	8-729-216-22	s	TRANSISTOR 2SA1162-G
Q205	8-729-216-22	s	TRANSISTOR 2SA1162-G
Q207	8-729-216-22	s	TRANSISTOR 2SA1162-G
Q301	8-729-013-28	s	TRANSISTOR HN1B01FU-TE85R
R101	1-216-864-11	s	CONDUCTOR, CHIP (1608)
R102	1-216-853-11	s	RESISTOR,CHIP 470K 1/16W(1608)
R103	1-216-853-11	s	RESISTOR,CHIP 470K 1/16W(1608)
R104	1-216-827-11	s	RESISTOR, CHIP 3.3K 1/16W 1608
R105	1-216-815-11	s	RESISTOR,CHIP 330 1/16W 1608
R106	1-216-833-11	s	RESISTOR,CHIP 10K 1/16W (1608)
R107	1-216-833-11	s	RESISTOR,CHIP 10K 1/16W (1608)
R108	1-216-829-11	s	RESISTOR,CHIP 4.7K 1/16W(1608)
R109	1-216-809-11	s	RESISTOR,CHIP 100 1/16W 1608
R110	1-216-809-11	s	RESISTOR,CHIP 100 1/16W 1608
R111	1-216-809-11	s	RESISTOR,CHIP 100 1/16W 1608
R112	1-216-809-11	s	RESISTOR,CHIP 100 1/16W 1608
R113	1-218-702-11	s	RESISTOR CHIP 2.7K 1/16W(1608)
R114	1-216-864-11	s	CONDUCTOR, CHIP (1608)
R115	1-216-809-11	s	RESISTOR,CHIP 100 1/16W 1608
R117	1-218-726-11	s	RESISTOR CHIP 27K 1/16W (1608)
R119	1-218-706-11	s	RESISTOR,CHIP 3.9K 1/16W(1608)
R120	1-216-833-11	s	RESISTOR,CHIP 10K 1/16W (1608)
R122	1-216-833-11	s	RESISTOR,CHIP 10K 1/16W (1608)
R124	1-216-809-11	s	RESISTOR,CHIP 100 1/16W 1608
R125	1-218-867-11	s	RESISTOR,CHIP 6.8K 1/10W(1608)
R126	1-216-805-11	s	RESISTOR,CHIP 47 1/16W 1608
R127	1-216-864-11	s	CONDUCTOR, CHIP (1608)
R128	1-216-809-11	s	RESISTOR,CHIP 100 1/16W 1608
R129	1-216-864-11	s	CONDUCTOR, CHIP (1608)

(BA BOARD)

Ref. No. or Q'ty	Part No.	SP	Description
R131	1-216-864-11	s	CONDUCTOR, CHIP (1608)
R133	1-218-704-11	s	RESISTOR,CHIP 3.3K 1/16W(1608)
R134	1-218-708-11	s	RESISTOR,CHIP 4.7K 1/16W(1608)
R135	1-216-825-11	s	RESISTOR,CHIP 2.2K 1/16W 1608
R136	1-216-809-11	s	RESISTOR,CHIP 100 1/16W 1608
R137	1-216-809-11	s	RESISTOR,CHIP 100 1/16W 1608
R140	1-216-805-11	s	RESISTOR,CHIP 47 1/16W 1608
R141	1-216-825-11	s	RESISTOR,CHIP 2.2K 1/16W 1608
R145	1-216-825-11	s	RESISTOR,CHIP 2.2K 1/16W 1608
R148	1-216-825-11	s	RESISTOR,CHIP 2.2K 1/16W 1608
R151	1-216-823-11	s	RESISTOR, CHIP 1.5K 1/16W
R152	1-216-827-11	s	RESISTOR, CHIP 3.3K 1/16W 1608
R154	1-216-821-11	s	RESISTOR,CHIP 1.0K 1/16W(1608)
R155	1-216-809-11	s	RESISTOR,CHIP 100 1/16W 1608
R156	1-216-818-11	s	RESISTOR, CHIP 560 1/16W 1608
R158	1-216-837-11	s	RESISTOR,CHIP 22K 1/16W 1608
R159	1-216-839-11	s	RESISTOR,CHIP 33K 1/16W 1608
R162	1-216-822-11	s	RESISTOR, CHIP 1.2K 1/16W 1608
R163	1-216-830-11	s	RESISTOR,CHIP 5.6K 1/16W 1608
R164	1-216-830-11	s	RESISTOR,CHIP 5.6K 1/16W 1608
R165	1-216-818-11	s	RESISTOR, CHIP 560 1/16W 1608
R166	1-216-842-11	s	RESISTOR,CHIP 56K 1/16W(1608)
R167	1-216-818-11	s	RESISTOR, CHIP 560 1/16W 1608
R168	1-216-821-11	s	RESISTOR,CHIP 1.0K 1/16W(1608)
R169	1-216-818-11	s	RESISTOR, CHIP 560 1/16W 1608
R170	1-216-829-11	s	RESISTOR,CHIP 4.7K 1/16W(1608)
R171	1-216-818-11	s	RESISTOR, CHIP 560 1/16W 1608
R172	1-216-821-11	s	RESISTOR,CHIP 1.0K 1/16W(1608)
R173	1-216-821-11	s	RESISTOR,CHIP 1.0K 1/16W(1608)
R174	1-216-821-11	s	RESISTOR,CHIP 1.0K 1/16W(1608)
R175	1-218-672-11	s	RESISTOR,CHIP 150 1/16W(1608)
R176	1-218-672-11	s	RESISTOR,CHIP 150 1/16W(1608)
R177	1-216-839-11	s	RESISTOR,CHIP 33K 1/16W 1608
R178	1-216-839-11	s	RESISTOR,CHIP 33K 1/16W 1608
R179	1-216-839-11	s	RESISTOR,CHIP 33K 1/16W 1608
R180	1-216-837-11	s	RESISTOR,CHIP 22K 1/16W 1608
R181	1-216-837-11	s	RESISTOR,CHIP 22K 1/16W 1608
R182	1-216-837-11	s	RESISTOR,CHIP 22K 1/16W 1608
R201	1-216-816-11	s	RESISTOR, CHIP 390 1/16W 1608
R202	1-216-816-11	s	RESISTOR, CHIP 390 1/16W 1608
R203	1-218-724-11	s	RESISTOR,CHIP 22K 1/16W(1608)
R206	1-216-805-11	s	RESISTOR,CHIP 47 1/16W 1608
R207	1-216-805-11	s	RESISTOR,CHIP 47 1/16W 1608
R208	1-216-809-11	s	RESISTOR,CHIP 100 1/16W 1608
R209	1-216-809-11	s	RESISTOR,CHIP 100 1/16W 1608
R213	1-216-863-11	s	RESISTOR,CHIP 3.3M 1/16W 1608
R214	1-216-805-11	s	RESISTOR,CHIP 47 1/16W 1608
R215	1-216-838-11	s	RESISTOR CHIP 27K 1/16W(1608)
R217	1-216-841-11	s	RESISTOR, CHIP 47K 1/16W 1608
R219	1-218-710-11	s	RESISTOR,CHIP 5.6K 1/16W(1608)
R220	1-216-805-11	s	RESISTOR,CHIP 47 1/16W 1608
R221	1-216-809-11	s	RESISTOR,CHIP 100 1/16W 1608
R222	1-216-809-11	s	RESISTOR,CHIP 100 1/16W 1608
R223	1-218-732-11	s	RESISTOR,CHIP 47K 1/16W(1608)
R225	1-218-708-11	s	RESISTOR,CHIP 4.7K 1/16W(1608)
R228	1-216-805-11	s	RESISTOR,CHIP 47 1/16W 1608
R229	1-216-805-11	s	RESISTOR,CHIP 47 1/16W 1608
R230	1-216-805-11	s	RESISTOR,CHIP 47 1/16W 1608
R231	1-216-821-11	s	RESISTOR,CHIP 1.0K 1/16W(1608)

(BA BOARD)

Ref. No. or Q'ty	Part No.	SP	Description
R233	1-216-821-11	s	RESISTOR,CHIP 1.0K 1/16W(1608)
R235	1-216-821-11	s	RESISTOR,CHIP 1.0K 1/16W(1608)
R236	1-216-809-11	s	RESISTOR,CHIP 100 1/16W 1608
R237	1-216-833-11	s	RESISTOR,CHIP 10K 1/16W (1608)
R242	1-218-708-11	s	RESISTOR,CHIP 4.7K 1/16W(1608)
R243	1-216-805-11	s	RESISTOR,CHIP 47 1/16W 1608
R301	1-216-821-11	s	RESISTOR,CHIP 1.0K 1/16W(1608)
R302	1-216-809-11	s	RESISTOR,CHIP 100 1/16W 1608
R303	1-216-809-11	s	RESISTOR,CHIP 100 1/16W 1608
R304	1-216-841-11	s	RESISTOR, CHIP 47K 1/16W 1608
R305	1-216-841-11	s	RESISTOR, CHIP 47K 1/16W 1608
R306	1-216-809-11	s	RESISTOR,CHIP 100 1/16W 1608
R307	1-216-830-11	s	RESISTOR,CHIP 5.6K 1/16W 1608
R308	1-216-809-11	s	RESISTOR,CHIP 100 1/16W 1608
R309	1-216-809-11	s	RESISTOR,CHIP 100 1/16W 1608
R310	1-216-809-11	s	RESISTOR,CHIP 100 1/16W 1608
R311	1-216-841-11	s	RESISTOR, CHIP 47K 1/16W 1608
R312	1-216-809-11	s	RESISTOR,CHIP 100 1/16W 1608
RB101	1-233-576-11	s	RESISTOR,CHIP NETWORK 100
RB102	1-236-908-11	s	RESISTOR,NETWORK 10K (3216)
RB103	1-236-908-11	s	RESISTOR,NETWORK 10K (3216)
TH101	1-808-656-11	s	THERMISTOR
X101	1-781-612-11	s	VIBRATOR, CRYSTAL

BB BOARD
---

*a:[Serial No. 10001 - 5000000 ;for VPL-CS4]
*b:[Serial No. 5000001 - ;for VPL-CS4]
*c:[Serial No. 10001 - 12050 ;for VPL-CX4]
*d:[Serial No. 12051 - 5000000 ;for VPL-CX4]
*e:[Serial No. 5000001 - ;for VPL-CX4]

Ref. No. or Q'ty	Part No.	SP	Description
1pc	*e A-1136-273-A	s	MOUNTED CIRCUIT BOARD, BB
1pc	*b A-1136-275-A	s	MOUNTED CIRCUIT BOARD, BB
1pc	*c A-1136-277-A	s	MOUNTED CIRCUIT BOARD, BB
1pc	*a A-1136-279-A	s	MOUNTED CIRCUIT BOARD, BB
1pc	*d A-1300-312-A	s	MOUNTED CIRCUIT BOARD, BB
C101	1-162-970-11	s	CAPACITOR CERAMIC 0.01MF/25V B
C102	1-162-970-11	s	CAPACITOR CERAMIC 0.01MF/25V B
C103	1-162-970-11	s	CAPACITOR CERAMIC 0.01MF/25V B
C104	1-126-205-11	s	CAPACITOR,ELECT 47M/6.3
C105	1-126-205-11	s	CAPACITOR,ELECT 47M/6.3
C106	1-126-205-11	s	CAPACITOR,ELECT 47M/6.3
C107	1-115-566-11	s	CAPACITOR,CERAMIC 4.7MF B/6.3V
C108	1-115-566-11	s	CAPACITOR,CERAMIC 4.7MF B/6.3V
C109	1-107-826-11	s	CAPACITOR,CHIP CERAMIC 0.1MF
C110	1-107-826-11	s	CAPACITOR,CHIP CERAMIC 0.1MF
C111	1-107-826-11	s	CAPACITOR,CHIP CERAMIC 0.1MF
C112	1-107-826-11	s	CAPACITOR,CHIP CERAMIC 0.1MF
C113	1-107-826-11	s	CAPACITOR,CHIP CERAMIC 0.1MF
C118	1-107-826-11	s	CAPACITOR,CHIP CERAMIC 0.1MF
C119	1-131-998-11	s	CAP, SOLID ELECT 82MF 6.3 V
C120	1-107-826-11	s	CAPACITOR,CHIP CERAMIC 0.1MF
C121	1-107-826-11	s	CAPACITOR,CHIP CERAMIC 0.1MF
C122	1-127-861-11	s	CAP, CERAMIC 2.2MF B (3216)
C123	1-131-998-11	s	CAP, SOLID ELECT 82MF 6.3 V
C124	1-107-826-11	s	CAPACITOR,CHIP CERAMIC 0.1MF
C125	1-107-826-11	s	CAPACITOR,CHIP CERAMIC 0.1MF
C126	1-107-826-11	s	CAPACITOR,CHIP CERAMIC 0.1MF
C127	1-107-826-11	s	CAPACITOR,CHIP CERAMIC 0.1MF
C128	1-110-563-11	s	CAPACITOR CERAMIC 0.068MF/16V
C129	1-115-566-11	s	CAPACITOR,CERAMIC 4.7MF B/6.3V
C130	1-115-566-11	s	CAPACITOR,CERAMIC 4.7MF B/6.3V
C131	1-124-779-00	s	CAPACITOR,ELECT 10MF/16V
C132	1-162-927-11	s	CAPACITOR,CERAMIC 100PF/50V CH
C133	1-164-816-11	s	CAPACITOR,CERAMIC 220PF/50V CH
C134	1-162-970-11	s	CAPACITOR CERAMIC 0.01MF/25V B
C135	1-126-206-11	s	CAPACITOR, ELECT 100MF/6.3V
C136	1-107-826-11	s	CAPACITOR,CHIP CERAMIC 0.1MF
C137	1-162-927-11	s	CAPACITOR,CERAMIC 100PF/50V CH
C138	1-107-826-11	s	CAPACITOR,CHIP CERAMIC 0.1MF
C139	1-107-826-11	s	CAPACITOR,CHIP CERAMIC 0.1MF
C140	1-107-826-11	s	CAPACITOR,CHIP CERAMIC 0.1MF
C141	1-162-927-11	s	CAPACITOR,CERAMIC 100PF/50V CH
C142	1-162-964-11	s	CAPACITOR,CERAMIC 1000PF/50V B
C143	1-128-934-11	s	CAPCITOR CHIP CERAMIC 0.33MF
C144	1-124-778-00	s	CAPACITOR,ELECT 22MF/6.3V
C145	1-124-778-00	s	CAPACITOR,ELECT 22MF/6.3V
C201	1-165-176-11	s	CAPACITOR,CERAMIC 47000PF/16V
C202	1-164-505-11	s	CAPACITOR,CHIP CERAMIC 2.2MF
C203	1-165-176-11	s	CAPACITOR,CERAMIC 47000PF/16V
C204	1-107-826-11	s	CAPACITOR,CHIP CERAMIC 0.1MF
C205	1-165-176-11	s	CAPACITOR,CERAMIC 47000PF/16V
C206	1-162-970-11	s	CAPACITOR CERAMIC 0.01MF/25V B
C207	1-107-826-11	s	CAPACITOR,CHIP CERAMIC 0.1MF
C208	1-107-826-11	s	CAPACITOR,CHIP CERAMIC 0.1MF

(BB BOARD)

Ref. No. or Q'ty	Part No.	SP	Description
C209	1-165-176-11	s	CAPACITOR,CERAMIC 47000PF/16V
C210	1-107-826-11	s	CAPACITOR,CHIP CERAMIC 0.1MF
C211	1-162-970-11	s	CAPACITOR CERAMIC 0.01MF/25V B
C212	1-107-826-11	s	CAPACITOR,CHIP CERAMIC 0.1MF
C213	1-162-970-11	s	CAPACITOR CERAMIC 0.01MF/25V B
C214	1-162-970-11	s	CAPACITOR CERAMIC 0.01MF/25V B
C215	1-107-826-11	s	CAPACITOR,CHIP CERAMIC 0.1MF
C216	1-119-667-11	s	CAPACITOR CERAMIC 22MF/10V(F)
C217	1-107-826-11	s	CAPACITOR,CHIP CERAMIC 0.1MF
C218	1-126-205-11	s	CAPACITOR,ELECT 47M/6.3
C219	1-107-826-11	s	CAPACITOR,CHIP CERAMIC 0.1MF
C220	1-162-970-11	s	CAPACITOR CERAMIC 0.01MF/25V B
C221	1-107-826-11	s	CAPACITOR,CHIP CERAMIC 0.1MF
C222	1-164-173-11	s	CAPACITOR,CERAMIC 3900PF/50V B
C223	1-137-652-91	s	CAPACITOR,CERAMIC 39000PF /16V
C224	1-107-826-11	s	CAPACITOR,CHIP CERAMIC 0.1MF
C225	1-107-826-11	s	CAPACITOR,CHIP CERAMIC 0.1MF
C226	1-162-970-11	s	CAPACITOR CERAMIC 0.01MF/25V B
C227	1-107-826-11	s	CAPACITOR,CHIP CERAMIC 0.1MF
C228	1-162-970-11	s	CAPACITOR CERAMIC 0.01MF/25V B
C229	1-162-970-11	s	CAPACITOR CERAMIC 0.01MF/25V B
C230	1-107-826-11	s	CAPACITOR,CHIP CERAMIC 0.1MF
C231	1-107-826-11	s	CAPACITOR,CHIP CERAMIC 0.1MF
C232	1-162-970-11	s	CAPACITOR CERAMIC 0.01MF/25V B
C233	1-107-826-11	s	CAPACITOR,CHIP CERAMIC 0.1MF
C234	1-162-970-11	s	CAPACITOR CERAMIC 0.01MF/25V B
C235	1-164-505-11	s	CAPACITOR,CHIP CERAMIC 2.2MF
C236	1-162-916-11	s	CAPACITOR,CERAMIC 12PF/50V CH
C237	1-162-916-11	s	CAPACITOR,CERAMIC 12PF/50V CH
C238	1-107-826-11	s	CAPACITOR,CHIP CERAMIC 0.1MF
C239	1-162-970-11	s	CAPACITOR CERAMIC 0.01MF/25V B
C240	1-119-667-11	s	CAPACITOR CERAMIC 22MF/10V(F)
C301	1-107-826-11	s	CAPACITOR,CHIP CERAMIC 0.1MF
C302	1-107-826-11	s	CAPACITOR,CHIP CERAMIC 0.1MF
C303	1-107-826-11	s	CAPACITOR,CHIP CERAMIC 0.1MF
C304	1-107-826-11	s	CAPACITOR,CHIP CERAMIC 0.1MF
C305	1-107-826-11	s	CAPACITOR,CHIP CERAMIC 0.1MF
C306	1-107-826-11	s	CAPACITOR,CHIP CERAMIC 0.1MF
C307	1-107-826-11	s	CAPACITOR,CHIP CERAMIC 0.1MF
C308	1-107-826-11	s	CAPACITOR,CHIP CERAMIC 0.1MF
C309	1-107-826-11	s	CAPACITOR,CHIP CERAMIC 0.1MF
C310	1-107-826-11	s	CAPACITOR,CHIP CERAMIC 0.1MF
C311	1-107-826-11	s	CAPACITOR,CHIP CERAMIC 0.1MF
C312	1-107-826-11	s	CAPACITOR,CHIP CERAMIC 0.1MF
C313	1-107-826-11	s	CAPACITOR,CHIP CERAMIC 0.1MF
C314	1-109-982-11	s	CAPACITOR,CHIP CERAMIC 1MF/10V
C315	1-107-826-11	s	CAPACITOR,CHIP CERAMIC 0.1MF
C316	1-107-826-11	s	CAPACITOR,CHIP CERAMIC 0.1MF
C317	1-107-826-11	s	CAPACITOR,CHIP CERAMIC 0.1MF
C318	1-107-826-11	s	CAPACITOR,CHIP CERAMIC 0.1MF
C319	1-107-826-11	s	CAPACITOR,CHIP CERAMIC 0.1MF
C320	1-126-205-11	s	CAPACITOR,ELECT 47M/6.3
C321	1-107-826-11	s	CAPACITOR,CHIP CERAMIC 0.1MF
C322	1-107-826-11	s	CAPACITOR,CHIP CERAMIC 0.1MF
C323	1-107-826-11	s	CAPACITOR,CHIP CERAMIC 0.1MF
C324	1-126-205-11	s	CAPACITOR,ELECT 47M/6.3
C325	1-107-826-11	s	CAPACITOR,CHIP CERAMIC 0.1MF
C326	1-107-826-11	s	CAPACITOR,CHIP CERAMIC 0.1MF
C327	1-107-826-11	s	CAPACITOR,CHIP CERAMIC 0.1MF

(BB BOARD)

Ref. No. or Q'ty	Part No.	SP	Description
C328	1-107-826-11	s	CAPACITOR,CHIP CERAMIC 0.1MF
C329	1-107-826-11	s	CAPACITOR,CHIP CERAMIC 0.1MF
C330	1-107-826-11	s	CAPACITOR,CHIP CERAMIC 0.1MF
C331	1-107-826-11	s	CAPACITOR,CHIP CERAMIC 0.1MF
C332	1-107-826-11	s	CAPACITOR,CHIP CERAMIC 0.1MF
C333	1-107-826-11	s	CAPACITOR,CHIP CERAMIC 0.1MF
C334	1-107-826-11	s	CAPACITOR,CHIP CERAMIC 0.1MF
C335	1-107-826-11	s	CAPACITOR,CHIP CERAMIC 0.1MF
C336	1-107-826-11	s	CAPACITOR,CHIP CERAMIC 0.1MF
C337	1-107-826-11	s	CAPACITOR,CHIP CERAMIC 0.1MF
C338	1-107-826-11	s	CAPACITOR,CHIP CERAMIC 0.1MF
C401	1-109-982-11	s	CAPACITOR,CHIP CERAMIC 1MF/10V
C402	1-109-982-11	s	CAPACITOR,CHIP CERAMIC 1MF/10V
C403	1-109-982-11	s	CAPACITOR,CHIP CERAMIC 1MF/10V
C404	1-115-566-11	s	CAPACITOR,CERAMIC 4.7MF B/6.3V
C405	1-125-889-11	s	CAPACITOR, C.CERAMIC 2.2MF
C406	1-107-826-11	s	CAPACITOR,CHIP CERAMIC 0.1MF
C407	1-107-826-11	s	CAPACITOR,CHIP CERAMIC 0.1MF
C408	1-107-826-11	s	CAPACITOR,CHIP CERAMIC 0.1MF
C409	1-162-915-11	s	CAPACITOR,CERAMIC 10PF/50V CH
C410	1-107-826-11	s	CAPACITOR,CHIP CERAMIC 0.1MF
C411	1-162-915-11	s	CAPACITOR,CERAMIC 10PF/50V CH
C412	1-162-970-11	s	CAPACITOR CERAMIC 0.01MF/25V B
C413	1-164-315-11	s	CAPACITOR,CERAMIC 470PF/50V CH
C414	1-107-826-11	s	CAPACITOR,CHIP CERAMIC 0.1MF
C415	1-107-826-11	s	CAPACITOR,CHIP CERAMIC 0.1MF
C416	1-107-826-11	s	CAPACITOR,CHIP CERAMIC 0.1MF
C417	1-162-970-11	s	CAPACITOR CERAMIC 0.01MF/25V B
CN101	1-784-828-11	s	CONNECTOR, D SUB
CN103	1-785-305-21	o	CONNECTOR, BOARD TO BOARD
CN104	1-785-305-21	o	CONNECTOR, BOARD TO BOARD
CN105	1-785-305-21	o	CONNECTOR, BOARD TO BOARD
D101	8-719-073-11	s	DIODE BZA456A
D102	8-719-800-76	s	DIODE 1SS226
D103	8-719-800-76	s	DIODE 1SS226
D104	8-719-800-76	s	DIODE 1SS226
D105	8-719-024-77	s	DIODE HN1D03FU-TE85L
D106	8-719-988-61	s	DIODE 1SS355TE-17
D107	8-719-988-61	s	DIODE 1SS355TE-17
D301	8-719-914-43	s	DIODE DAN202K
D401	8-719-024-77	s	DIODE HN1D03FU-TE85L
D402	8-719-024-77	s	DIODE HN1D03FU-TE85L
FB101	1-414-921-11	s	INDUCTOR, FERRITE BEAD
FB102	1-414-921-11	s	INDUCTOR, FERRITE BEAD
FB103	1-414-921-11	s	INDUCTOR, FERRITE BEAD
FB104	1-414-921-11	s	INDUCTOR, FERRITE BEAD
FB105	1-414-921-11	s	INDUCTOR, FERRITE BEAD
FB202	1-414-921-11	s	INDUCTOR, FERRITE BEAD
FB301	1-500-451-11	s	MICRO INDUCTOR (CHIP) 41P750S
FB302	1-414-921-11	s	INDUCTOR, FERRITE BEAD
FB303	1-500-451-11	s	MICRO INDUCTOR (CHIP) 41P750S
FB304	1-414-921-11	s	INDUCTOR, FERRITE BEAD
FB305	1-414-921-11	s	INDUCTOR, FERRITE BEAD
IC101	----------		IC ST24FC21M6TR
Note	If this IC has failed, replace the whole BB board.		
IC102	8-759-541-25	s	IC M52758FP
IC103	8-759-646-02	s	IC M52347FP-TE
IC104	8-759-531-92	s	IC TC7WH04FU(TE12R)

(BB BOARD)

Ref. No. or Q'ty	Part No.	SP	Description
IC105	8-759-472-37	s	IC 74VHC240MTCX
IC106	8-759-586-19	s	IC TC7WH123FU(TE12R)
IC107	8-752-072-81	s	IC CXA1875AM
IC108	8-759-533-85	s	IC L88M05T-FA-TL
IC109	8-759-652-56	s	IC BA033F-E2
IC201	8-759-659-65	s	IC LP2985IM5X-3.3
IC202 *a	8-759-670-41	s	IC AD9884AKS-100
*b	8-759-670-41	s	IC AD9884AKS-100
*c	8-759-645-12	s	IC AD9884AKS-140
*d	8-759-645-12	s	IC AD9884AKS-140
*e	8-759-645-12	s	IC AD9884AKS-140
IC203	8-759-472-14	s	IC 74VHC125MTCX
IC205	8-759-683-96	s	IC MK1714-01RT
IC301	8-759-544-01	s	IC S-80828ANNP-EDR-T2
IC302	8-759-471-89	s	IC 74VHC02MTCX
IC303	8-759-831-61	s	IC PW164-10
IC304	8-759-472-14	s	IC 74VHC125MTCX
IC305	6-801-162-01	s	IC MBM29LV400TC-70PFTN-SX-1730
Note	Replace this IC for VPL-CX4 after it is rewritten in all kind of data by writer.		
IC306	8-759-573-65	s	IC IDT71V016S20PHAU-TL
IC401	8-759-582-91	s	IC S-80842ANNP-ED6-T2
IC402	8-759-544-01	s	IC S-80828ANNP-EDR-T2
IC403	8-759-648-10	s	IC HD64F2633TE
Note	Replace this IC after it is written in all kind of data by flash memory writer.		
IC404	8-759-659-65	s	IC LP2985IM5X-3.3
L201	1-412-057-11	s	INDUCTOR (SMALL TYPE) 6.8UH
L202	1-469-528-91	s	INDUCTOR 100UH (NLFV25)
Q101	8-729-140-63	s	TRANSISTOR 2SA1611-M5M6
Q102	8-729-013-28	s	TRANSISTOR HN1B01FU-TE85R
Q103	8-729-013-28	s	TRANSISTOR HN1B01FU-TE85R
Q201	8-729-427-72	s	TRANSISTOR XP4501-TXE
Q202	8-729-907-00	s	TRANSISTOR DTC114EU
R101	1-216-864-11	s	CONDUCTOR, CHIP (1608)
R102	1-216-864-11	s	CONDUCTOR, CHIP (1608)
R103	1-216-864-11	s	CONDUCTOR, CHIP (1608)
R104	1-216-625-11	s	RESISTOR,CHIP 82 1/10W
R105	1-216-625-11	s	RESISTOR,CHIP 82 1/10W
R106	1-216-625-11	s	RESISTOR,CHIP 82 1/10W
R107	1-216-864-11	s	CONDUCTOR, CHIP (1608)
R108	1-216-821-11	s	RESISTOR,CHIP 1.0K 1/16W(1608)
R109	1-216-805-11	s	RESISTOR,CHIP 47 1/16W 1608
R110	1-216-821-11	s	RESISTOR,CHIP 1.0K 1/16W(1608)
R111	1-216-805-11	s	RESISTOR,CHIP 47 1/16W 1608
R112	1-216-813-11	s	RESISTOR, CHIP 220 1/16W 1608
R113	1-216-817-11	s	RESISTOR,CHIP 470 1/16W 1608
R114	1-216-817-11	s	RESISTOR,CHIP 470 1/16W 1608
R115	1-216-835-11	s	RESISTOR,CHIP 15K 1/16W
R116	1-216-817-11	s	RESISTOR,CHIP 470 1/16W 1608
R117	1-216-805-11	s	RESISTOR,CHIP 47 1/16W 1608
R118	1-216-805-11	s	RESISTOR,CHIP 47 1/16W 1608
R119	1-216-835-11	s	RESISTOR,CHIP 15K 1/16W
R120	1-216-817-11	s	RESISTOR,CHIP 470 1/16W 1608
R121	1-216-805-11	s	RESISTOR,CHIP 47 1/16W 1608
R122	1-216-805-11	s	RESISTOR,CHIP 47 1/16W 1608
R123	1-216-805-11	s	RESISTOR,CHIP 47 1/16W 1608
R124	1-216-841-11	s	RESISTOR, CHIP 47K 1/16W 1608
R125	1-216-805-11	s	RESISTOR,CHIP 47 1/16W 1608
R126	1-216-821-11	s	RESISTOR,CHIP 1.0K 1/16W(1608)
R127	1-216-821-11	s	RESISTOR,CHIP 1.0K 1/16W(1608)

(BB BOARD)

Ref. No. or Q'ty	Part No.	SP	Description
R128	1-216-817-11	s	RESISTOR,CHIP 470 1/16W 1608
R129	1-216-821-11	s	RESISTOR,CHIP 1.0K 1/16W(1608)
R130	1-216-821-11	s	RESISTOR,CHIP 1.0K 1/16W(1608)
R131	1-216-845-11	s	RESISTOR,CHIP 100K 1/16W(1608)
R132	1-216-805-11	s	RESISTOR,CHIP 47 1/16W 1608
R133	1-216-805-11	s	RESISTOR,CHIP 47 1/16W 1608
R134	1-216-805-11	s	RESISTOR,CHIP 47 1/16W 1608
R135	1-218-688-11	s	RESISTOR,CHIP 680 1/16W(1608)
R136	1-218-688-11	s	RESISTOR,CHIP 680 1/16W(1608)
R137	1-218-688-11	s	RESISTOR,CHIP 680 1/16W(1608)
R138	1-218-735-11	s	RESISTOR CHIP 62K 1/16W(1608)
R139	1-216-833-11	s	RESISTOR,CHIP 10K 1/16W (1608)
R140	1-216-864-11	s	CONDUCTOR, CHIP (1608)
R141	1-216-864-11	s	CONDUCTOR, CHIP (1608)
R142	1-216-864-11	s	CONDUCTOR, CHIP (1608)
R143	1-216-809-11	s	RESISTOR,CHIP 100 1/16W 1608
R144	1-216-809-11	s	RESISTOR,CHIP 100 1/16W 1608
R147	1-218-732-11	s	RESISTOR,CHIP 47K 1/16W(1608)
R148	1-218-708-11	s	RESISTOR,CHIP 4.7K 1/16W(1608)
R149	1-216-833-11	s	RESISTOR,CHIP 10K 1/16W (1608)
R150	1-218-716-11	s	RESISTOR,CHIP 10K 1/16W(1608)
R151	1-216-827-11	s	RESISTOR, CHIP 3.3K 1/16W 1608
R152	1-216-833-11	s	RESISTOR,CHIP 10K 1/16W (1608)
R153	1-216-809-11	s	RESISTOR,CHIP 100 1/16W 1608
R154	1-216-809-11	s	RESISTOR,CHIP 100 1/16W 1608
R155	1-216-811-11	s	RESISTOR, CHIP 150 1/16W(1608)
R156	1-216-810-11	s	RESISTOR, CHIP 120 1/16W 1608
R157	1-216-809-11	s	RESISTOR,CHIP 100 1/16W 1608
R158	1-216-809-11	s	RESISTOR,CHIP 100 1/16W 1608
R159	1-216-809-11	s	RESISTOR,CHIP 100 1/16W 1608
R160	1-216-809-11	s	RESISTOR,CHIP 100 1/16W 1608
R161	1-216-864-11	s	CONDUCTOR, CHIP (1608)
R201	1-216-809-11	s	RESISTOR,CHIP 100 1/16W 1608
R202	1-216-805-11	s	RESISTOR,CHIP 47 1/16W 1608
R203	1-216-845-11	s	RESISTOR,CHIP 100K 1/16W(1608)
R205	1-216-805-11	s	RESISTOR,CHIP 47 1/16W 1608
R206	1-216-801-11	s	RESISTOR,CHIP 22 1/16W (1608)
R207	1-216-801-11	s	RESISTOR,CHIP 22 1/16W (1608)
R208	1-216-851-11	s	RESISTOR,CHIP 330K 1/16W 1608
R211	1-216-809-11	s	RESISTOR,CHIP 100 1/16W 1608
R212	1-216-805-11	s	RESISTOR,CHIP 47 1/16W 1608
R213	1-216-833-11	s	RESISTOR,CHIP 10K 1/16W (1608)
R214	1-216-825-11	s	RESISTOR,CHIP 2.2K 1/16W 1608
R215	1-218-704-11	s	RESISTOR,CHIP 3.3K 1/16W(1608)
R216	1-216-805-11	s	RESISTOR,CHIP 47 1/16W 1608
R217	1-216-805-11	s	RESISTOR,CHIP 47 1/16W 1608
R218	1-216-801-11	s	RESISTOR,CHIP 22 1/16W (1608)
R219	1-216-809-11	s	RESISTOR,CHIP 100 1/16W 1608
R220	1-216-809-11	s	RESISTOR,CHIP 100 1/16W 1608
R222	1-216-833-11	s	RESISTOR,CHIP 10K 1/16W (1608)
R223	1-216-833-11	s	RESISTOR,CHIP 10K 1/16W (1608)
R224	1-216-821-11	s	RESISTOR,CHIP 1.0K 1/16W(1608)
R225	1-216-821-11	s	RESISTOR,CHIP 1.0K 1/16W(1608)
R226	1-216-801-11	s	RESISTOR,CHIP 22 1/16W (1608)
R227	1-216-821-11	s	RESISTOR,CHIP 1.0K 1/16W(1608)
R228	1-216-821-11	s	RESISTOR,CHIP 1.0K 1/16W(1608)
R229	1-216-805-11	s	RESISTOR,CHIP 47 1/16W 1608
R230	1-216-809-11	s	RESISTOR,CHIP 100 1/16W 1608

(BB BOARD)

Ref. No. or Q'ty	Part No.	SP	Description
R231 *a	1-216-809-11	s	RESISTOR,CHIP 100 1/16W 1608
*b	1-216-809-11	s	RESISTOR,CHIP 100 1/16W 1608
*c	1-216-801-11	s	RESISTOR,CHIP 22 1/16W (1608)
*d	1-216-801-11	s	RESISTOR,CHIP 22 1/16W (1608)
*e	1-216-801-11	s	RESISTOR,CHIP 22 1/16W (1608)
R232	1-216-821-11	s	RESISTOR,CHIP 1.0K 1/16W(1608)
R233	1-216-821-11	s	RESISTOR,CHIP 1.0K 1/16W(1608)
R235	1-216-833-11	s	RESISTOR,CHIP 10K 1/16W (1608)
R301	1-216-809-11	s	RESISTOR,CHIP 100 1/16W 1608
R302	1-216-839-11	s	RESISTOR,CHIP 33K 1/16W 1608
R303	1-216-833-11	s	RESISTOR,CHIP 10K 1/16W (1608)
R304	1-216-833-11	s	RESISTOR,CHIP 10K 1/16W (1608)
R306	1-216-809-11	s	RESISTOR,CHIP 100 1/16W 1608
R307	1-216-809-11	s	RESISTOR,CHIP 100 1/16W 1608
R308	1-216-809-11	s	RESISTOR,CHIP 100 1/16W 1608
R309	1-216-809-11	s	RESISTOR,CHIP 100 1/16W 1608
R310	1-216-827-11	s	RESISTOR, CHIP 3.3K 1/16W 1608
R311	1-216-827-11	s	RESISTOR, CHIP 3.3K 1/16W 1608
R312	1-216-805-11	s	RESISTOR,CHIP 47 1/16W 1608
R313	1-216-821-11	s	RESISTOR,CHIP 1.0K 1/16W(1608)
R314	1-216-805-11	s	RESISTOR,CHIP 47 1/16W 1608
R315	1-216-833-11	s	RESISTOR,CHIP 10K 1/16W (1608)
R316	1-216-833-11	s	RESISTOR,CHIP 10K 1/16W (1608)
R317	1-216-833-11	s	RESISTOR,CHIP 10K 1/16W (1608)
R318	1-216-825-11	s	RESISTOR,CHIP 2.2K 1/16W 1608
R401	1-216-833-11	s	RESISTOR,CHIP 10K 1/16W (1608)
R402	1-216-839-11	s	RESISTOR,CHIP 33K 1/16W 1608
R403	1-216-833-11	s	RESISTOR,CHIP 10K 1/16W (1608)
R404	1-216-839-11	s	RESISTOR,CHIP 33K 1/16W 1608
R405	1-216-841-11	s	RESISTOR, CHIP 47K 1/16W 1608
R406	1-216-833-11	s	RESISTOR,CHIP 10K 1/16W (1608)
R407	1-216-833-11	s	RESISTOR,CHIP 10K 1/16W (1608)
R408	1-216-833-11	s	RESISTOR,CHIP 10K 1/16W (1608)
R409	1-216-825-11	s	RESISTOR,CHIP 2.2K 1/16W 1608
R410	1-216-833-11	s	RESISTOR,CHIP 10K 1/16W (1608)
R411	1-216-833-11	s	RESISTOR,CHIP 10K 1/16W (1608)
R412	1-216-833-11	s	RESISTOR,CHIP 10K 1/16W (1608)
R413	1-216-825-11	s	RESISTOR,CHIP 2.2K 1/16W 1608
R415	1-216-821-11	s	RESISTOR,CHIP 1.0K 1/16W(1608)
R416	1-216-825-11	s	RESISTOR,CHIP 2.2K 1/16W 1608
R417	1-216-825-11	s	RESISTOR,CHIP 2.2K 1/16W 1608
R418	1-216-833-11	s	RESISTOR,CHIP 10K 1/16W (1608)
R419	1-216-833-11	s	RESISTOR,CHIP 10K 1/16W (1608)
R420	1-216-797-11	s	RESISTOR,CHIP 10 1/16W 1608
R421	1-218-703-11	s	RESISTOR,CHIP 3.0K 1/16(1608)
R422	1-218-675-11	s	RESISTOR,CHIP 200 1/16W (1608)
R423	1-216-809-11	s	RESISTOR,CHIP 100 1/16W 1608
R424	1-216-809-11	s	RESISTOR,CHIP 100 1/16W 1608
R426	1-216-825-11	s	RESISTOR,CHIP 2.2K 1/16W 1608
R427	1-216-825-11	s	RESISTOR,CHIP 2.2K 1/16W 1608
R429	1-216-833-11	s	RESISTOR,CHIP 10K 1/16W (1608)
R430	1-216-833-11	s	RESISTOR,CHIP 10K 1/16W (1608)
R431	1-216-833-11	s	RESISTOR,CHIP 10K 1/16W (1608)
R432	1-216-833-11	s	RESISTOR,CHIP 10K 1/16W (1608)
R433	1-216-833-11	s	RESISTOR,CHIP 10K 1/16W (1608)
R440	1-216-833-11	s	RESISTOR,CHIP 10K 1/16W (1608)
R441 *c	1-216-833-11	s	RESISTOR,CHIP 10K 1/16W (1608)
*d	1-216-833-11	s	RESISTOR,CHIP 10K 1/16W (1608)
*e	1-216-833-11	s	RESISTOR,CHIP 10K 1/16W (1608)
R443 *a	1-216-833-11	s	RESISTOR,CHIP 10K 1/16W (1608)
*b	1-216-833-11	s	RESISTOR,CHIP 10K 1/16W (1608)

(BB BOARD)

Ref. No. or Q'ty	Part No.	SP	Description
R444	1-216-833-11	s	RESISTOR,CHIP 10K 1/16W (1608)
R445	1-216-833-11	s	RESISTOR,CHIP 10K 1/16W (1608)
R446	1-216-809-11	s	RESISTOR,CHIP 100 1/16W 1608
R447	1-216-809-11	s	RESISTOR,CHIP 100 1/16W 1608
R448	1-216-809-11	s	RESISTOR,CHIP 100 1/16W 1608
RB201	1-236-908-11	s	RESISTOR,NETWORK 10K (3216)
RB202	1-233-574-11	s	RESISTOR,CHIP NETWORK 10
RB203	1-233-574-11	s	RESISTOR,CHIP NETWORK 10
RB204	1-233-574-11	s	RESISTOR,CHIP NETWORK 10
RB205	1-233-574-11	s	RESISTOR,CHIP NETWORK 10
RB206	1-233-574-11	s	RESISTOR,CHIP NETWORK 10
RB207	1-233-574-11	s	RESISTOR,CHIP NETWORK 10
RB401	1-233-576-11	s	RESISTOR,CHIP NETWORK 100
RB402	1-233-412-11	s	RESISTOR,CHIP NETWORK 1K
RB403	1-233-576-11	s	RESISTOR,CHIP NETWORK 100
RB404	1-233-576-11	s	RESISTOR,CHIP NETWORK 100
RB405	1-236-908-11	s	RESISTOR,NETWORK 10K (3216)
RB406	1-233-576-11	s	RESISTOR,CHIP NETWORK 100
RB407	1-233-576-11	s	RESISTOR,CHIP NETWORK 100
RB408	1-233-576-11	s	RESISTOR,CHIP NETWORK 100
RB409	1-233-576-11	s	RESISTOR,CHIP NETWORK 100
RB410	1-233-576-11	s	RESISTOR,CHIP NETWORK 100
RB411	1-233-576-11	s	RESISTOR,CHIP NETWORK 100
RB412	1-233-576-11	s	RESISTOR,CHIP NETWORK 100
RB413	1-233-576-11	s	RESISTOR,CHIP NETWORK 100
TH101	9-910-999-31	s	SUPPLY END
TP101	1-535-757-11	s	CHIP, CHECKER (CONNECTOR)
TP102	1-535-757-11	s	CHIP, CHECKER (CONNECTOR)
TP103	1-535-757-11	s	CHIP, CHECKER (CONNECTOR)
TP201	1-535-757-11	s	CHIP, CHECKER (CONNECTOR)
TP202	1-535-757-11	s	CHIP, CHECKER (CONNECTOR)
TP401	1-535-757-11	s	CHIP, CHECKER (CONNECTOR)
X201	*a 1-767-908-11	s	VIBRATOR, CRYSTAL 13.08384MHz
	*b 1-767-908-11	s	VIBRATOR, CRYSTAL 13.08384MHz
	*c 1-795-068-11	s	VIBRATOR, CRYSTAL 16.9344MHz
	*d 1-795-068-11	s	VIBRATOR, CRYSTAL 16.9344MHz
	*e 1-795-068-11	s	VIBRATOR, CRYSTAL 16.9344MHz
X301	1-795-260-21	s	OSCILLATOR, CRYSTAL
X401	1-781-659-11	s	VIBRATOR, CRYSTAL

C BOARD ;for VPL-CS4

---

*a:[Serial No. 10001 - 5000000 ;for VPL-CS4]
*b:[Serial No. 5000001 - ;for VPL-CS4]

Ref. No. or Q'ty	Part No.	SP	Description
1pc	*a A-1300-136-A	s	MOUNTED CIRCUIT BOARD, C
1pc	*b A-1300-137-A	s	MOUNTED CIRCUIT BOARD, C
C101	1-131-998-11	s	CAP, SOLID ELECT 82MF 6.3 V
C102	1-164-156-11	s	CAPACITOR,CERAMIC 0.1MF/25V F
C103	1-126-204-11	s	CAPACITOR, ELECT 47MF/16V(CHIP
C104	1-128-992-11	s	CAPACITOR ELECT 47MF 25V
C106	1-107-826-11	s	CAPACITOR,CHIP CERAMIC 0.1MF
C107	1-162-970-11	s	CAPACITOR CERAMIC 0.01MF/25V B
C108	1-162-970-11	s	CAPACITOR CERAMIC 0.01MF/25V B
C110	1-126-205-11	s	CAPACITOR,ELECT 47M/6.3
C111	1-162-970-11	s	CAPACITOR CERAMIC 0.01MF/25V B
C112	1-107-826-11	s	CAPACITOR,CHIP CERAMIC 0.1MF
C113	1-107-826-11	s	CAPACITOR,CHIP CERAMIC 0.1MF
C114	1-126-205-11	s	CAPACITOR,ELECT 47M/6.3
C115	1-107-826-11	s	CAPACITOR,CHIP CERAMIC 0.1MF
C116	1-107-826-11	s	CAPACITOR,CHIP CERAMIC 0.1MF
C117	1-164-156-11	s	CAPACITOR,CERAMIC 0.1MF/25V F
C118	1-126-205-11	s	CAPACITOR,ELECT 47M/6.3
C119	1-107-826-11	s	CAPACITOR,CHIP CERAMIC 0.1MF
C122	1-164-156-11	s	CAPACITOR,CERAMIC 0.1MF/25V F
C123	1-107-826-11	s	CAPACITOR,CHIP CERAMIC 0.1MF
C124	1-128-995-11	s	CAPACITOR ELECT 100MF / 10 V
C201	1-107-826-11	s	CAPACITOR,CHIP CERAMIC 0.1MF
C202	1-109-982-11	s	CAPACITOR,CHIP CERAMIC 1MF/10V
C203	1-107-826-11	s	CAPACITOR,CHIP CERAMIC 0.1MF
C205	1-162-970-11	s	CAPACITOR CERAMIC 0.01MF/25V B
C206	1-107-826-11	s	CAPACITOR,CHIP CERAMIC 0.1MF
C207	1-107-826-11	s	CAPACITOR,CHIP CERAMIC 0.1MF
C208	1-107-826-11	s	CAPACITOR,CHIP CERAMIC 0.1MF
C209	1-107-826-11	s	CAPACITOR,CHIP CERAMIC 0.1MF
C210	1-107-826-11	s	CAPACITOR,CHIP CERAMIC 0.1MF
C211	1-107-826-11	s	CAPACITOR,CHIP CERAMIC 0.1MF
C212	1-107-826-11	s	CAPACITOR,CHIP CERAMIC 0.1MF
C213	1-107-826-11	s	CAPACITOR,CHIP CERAMIC 0.1MF
C214	1-107-826-11	s	CAPACITOR,CHIP CERAMIC 0.1MF
C215	1-126-205-11	s	CAPACITOR,ELECT 47M/6.3
C216	1-107-826-11	s	CAPACITOR,CHIP CERAMIC 0.1MF
C217	1-107-826-11	s	CAPACITOR,CHIP CERAMIC 0.1MF
C218	1-162-910-11	s	CAPACITOR,CERAMIC 5PF/50V 1608
C219	1-126-205-11	s	CAPACITOR,ELECT 47M/6.3
C220	1-107-826-11	s	CAPACITOR,CHIP CERAMIC 0.1MF
C221	1-107-826-11	s	CAPACITOR,CHIP CERAMIC 0.1MF
C222	1-107-826-11	s	CAPACITOR,CHIP CERAMIC 0.1MF
C301	1-162-970-11	s	CAPACITOR CERAMIC 0.01MF/25V B
C302	1-126-205-11	s	CAPACITOR,ELECT 47M/6.3
C303	1-107-826-11	s	CAPACITOR,CHIP CERAMIC 0.1MF
C304	1-124-779-00	s	CAPACITOR,ELECT 10MF/16V
C305	1-162-970-11	s	CAPACITOR CERAMIC 0.01MF/25V B
C306	1-126-602-11	s	CAPACITOR,ELECT 3.3MF/50V(CHIP
C307	1-115-467-11	s	CAPACITOR CERAMIC 0.22MF/10V B
C308	1-107-826-11	s	CAPACITOR,CHIP CERAMIC 0.1MF
C309	1-124-779-00	s	CAPACITOR,ELECT 10MF/16V
C310	1-115-467-11	s	CAPACITOR CERAMIC 0.22MF/10V B
C311	1-162-970-11	s	CAPACITOR CERAMIC 0.01MF/25V B
C312	1-126-602-11	s	CAPACITOR,ELECT 3.3MF/50V(CHIP
C313	1-124-779-00	s	CAPACITOR,ELECT 10MF/16V

(C BOARD ;for VPL-CS4)

Ref. No. or Q'ty	Part No.	SP	Description
C314	1-107-826-11	s	CAPACITOR,CHIP CERAMIC 0.1MF
C315	1-162-970-11	s	CAPACITOR CERAMIC 0.01MF/25V B
C316	1-126-602-11	s	CAPACITOR,ELECT 3.3MF/50V(CHIP
C317	1-162-970-11	s	CAPACITOR CERAMIC 0.01MF/25V B
C318	1-135-347-11	s	CAP, SOLID ELECT 82MF
C320	1-126-205-11	s	CAPACITOR,ELECT 47M/6.3
C321	1-107-826-11	s	CAPACITOR,CHIP CERAMIC 0.1MF
C322	1-107-826-11	s	CAPACITOR,CHIP CERAMIC 0.1MF
C323	1-164-156-11	s	CAPACITOR,CERAMIC 0.1MF/25V F
C324	1-107-826-11	s	CAPACITOR,CHIP CERAMIC 0.1MF
C325	1-126-205-11	s	CAPACITOR,ELECT 47M/6.3
C401	1-115-467-11	s	CAPACITOR CERAMIC 0.22MF/10V B
C402	1-107-826-11	s	CAPACITOR,CHIP CERAMIC 0.1MF
C404	1-107-826-11	s	CAPACITOR,CHIP CERAMIC 0.1MF
C407	1-107-826-11	s	CAPACITOR,CHIP CERAMIC 0.1MF
C408	1-127-760-11	s	CAPACITOR,CERAMIC 4.7MF/6.3V
C409	1-107-826-11	s	CAPACITOR,CHIP CERAMIC 0.1MF
C410	1-162-922-11	s	CAPACITOR,CERAMIC 39PF/50V CH
C411	1-107-826-11	s	CAPACITOR,CHIP CERAMIC 0.1MF
C412	1-164-156-11	s	CAPACITOR,CERAMIC 0.1MF/25V F
C414	1-107-826-11	s	CAPACITOR,CHIP CERAMIC 0.1MF
C415	1-107-826-11	s	CAPACITOR,CHIP CERAMIC 0.1MF
C416	1-128-992-11	s	CAPACITOR ELECT 47MF 25V
C417	1-164-156-11	s	CAPACITOR,CERAMIC 0.1MF/25V F
C419	1-128-992-11	s	CAPACITOR ELECT 47MF 25V
C420	1-164-156-11	s	CAPACITOR,CERAMIC 0.1MF/25V F
C421	1-162-970-11	s	CAPACITOR CERAMIC 0.01MF/25V B
C423	1-115-340-11	s	CAPACITOR CERAMIC 0.22MF/25V B
C424	1-164-156-11	s	CAPACITOR,CERAMIC 0.1MF/25V F
C425	1-164-156-11	s	CAPACITOR,CERAMIC 0.1MF/25V F
C426	1-164-156-11	s	CAPACITOR,CERAMIC 0.1MF/25V F
C427	1-117-681-11	s	CAPACITOR, ELECT 100MF/16V
C428	1-164-156-11	s	CAPACITOR,CERAMIC 0.1MF/25V F
C429	1-115-467-11	s	CAPACITOR CERAMIC 0.22MF/10V B
C430	1-115-467-11	s	CAPACITOR CERAMIC 0.22MF/10V B
C501	1-115-467-11	s	CAPACITOR CERAMIC 0.22MF/10V B
C502	1-107-826-11	s	CAPACITOR,CHIP CERAMIC 0.1MF
C504	1-107-826-11	s	CAPACITOR,CHIP CERAMIC 0.1MF
C507	1-107-826-11	s	CAPACITOR,CHIP CERAMIC 0.1MF
C508	1-127-760-11	s	CAPACITOR,CERAMIC 4.7MF/6.3V
C509	1-107-826-11	s	CAPACITOR,CHIP CERAMIC 0.1MF
C510	1-162-922-11	s	CAPACITOR,CERAMIC 39PF/50V CH
C511	1-107-826-11	s	CAPACITOR,CHIP CERAMIC 0.1MF
C512	1-164-156-11	s	CAPACITOR,CERAMIC 0.1MF/25V F
C514	1-107-826-11	s	CAPACITOR,CHIP CERAMIC 0.1MF
C515	1-107-826-11	s	CAPACITOR,CHIP CERAMIC 0.1MF
C516	1-128-992-11	s	CAPACITOR ELECT 47MF 25V
C517	1-164-156-11	s	CAPACITOR,CERAMIC 0.1MF/25V F
C519	1-128-992-11	s	CAPACITOR ELECT 47MF 25V
C520	1-164-156-11	s	CAPACITOR,CERAMIC 0.1MF/25V F
C521	1-164-156-11	s	CAPACITOR,CERAMIC 0.1MF/25V F
C522	1-164-156-11	s	CAPACITOR,CERAMIC 0.1MF/25V F
C523	1-117-681-11	s	CAPACITOR, ELECT 100MF/16V
C524	1-164-156-11	s	CAPACITOR,CERAMIC 0.1MF/25V F
C525	1-115-467-11	s	CAPACITOR CERAMIC 0.22MF/10V B
C526	1-115-467-11	s	CAPACITOR CERAMIC 0.22MF/10V B
C601	1-115-467-11	s	CAPACITOR CERAMIC 0.22MF/10V B
C602	1-107-826-11	s	CAPACITOR,CHIP CERAMIC 0.1MF
C604	1-107-826-11	s	CAPACITOR,CHIP CERAMIC 0.1MF

(C BOARD ;for VPL-CS4)

Ref. No. or Q'ty	Part No.	SP	Description
C607	1-107-826-11	s	CAPACITOR,CHIP CERAMIC 0.1MF
C608	1-127-760-11	s	CAPACITOR,CERAMIC 4.7MF/6.3V
C609	1-162-970-11	s	CAPACITOR CERAMIC 0.01MF/25V B
C610	1-162-922-11	s	CAPACITOR,CERAMIC 39PF/50V CH
C611	1-107-826-11	s	CAPACITOR,CHIP CERAMIC 0.1MF
C612	1-164-156-11	s	CAPACITOR,CERAMIC 0.1MF/25V F
C614	1-107-826-11	s	CAPACITOR,CHIP CERAMIC 0.1MF
C615	1-107-826-11	s	CAPACITOR,CHIP CERAMIC 0.1MF
C616	1-128-992-11	s	CAPACITOR ELECT 47MF 25V
C617	1-164-156-11	s	CAPACITOR,CERAMIC 0.1MF/25V F
C619	1-128-992-11	s	CAPACITOR ELECT 47MF 25V
C620	1-164-156-11	s	CAPACITOR,CERAMIC 0.1MF/25V F
C621	1-164-156-11	s	CAPACITOR,CERAMIC 0.1MF/25V F
C622	1-164-156-11	s	CAPACITOR,CERAMIC 0.1MF/25V F
C623	1-117-681-11	s	CAPACITOR, ELECT 100MF/16V
C624	1-164-156-11	s	CAPACITOR,CERAMIC 0.1MF/25V F
C625	1-115-467-11	s	CAPACITOR CERAMIC 0.22MF/10V B
C626	1-115-467-11	s	CAPACITOR CERAMIC 0.22MF/10V B
C701	1-107-686-11	s	CAPACITOR,TANTALUM 4.7MF/16V
C702	1-107-686-11	s	CAPACITOR,TANTALUM 4.7MF/16V
C703	1-165-176-11	s	CAPACITOR,CERAMIC 47000PF/16V
C704	1-115-467-11	s	CAPACITOR CERAMIC 0.22MF/10V B
C705	1-107-826-11	s	CAPACITOR,CHIP CERAMIC 0.1MF
C706	1-165-176-11	s	CAPACITOR,CERAMIC 47000PF/16V
C707	1-109-982-11	s	CAPACITOR,CHIP CERAMIC 1MF/10V
C708	1-124-779-00	s	CAPACITOR,ELECT 10MF/16V
C709	1-113-985-11	s	CAPACITOR,TANTALUM 10MF/20V
C710	1-109-982-11	s	CAPACITOR,CHIP CERAMIC 1MF/10V
C711	1-107-686-11	s	CAPACITOR,TANTALUM 4.7MF/16V
C712	1-126-204-11	s	CAPACITOR, ELECT 47MF/16V(CHIP
C713	1-107-826-11	s	CAPACITOR,CHIP CERAMIC 0.1MF
C714	1-107-686-11	s	CAPACITOR,TANTALUM 4.7MF/16V
C715	1-165-176-11	s	CAPACITOR,CERAMIC 47000PF/16V
C716	1-115-467-11	s	CAPACITOR CERAMIC 0.22MF/10V B
C717	1-135-342-11	s	CAPACITOR,SOLID ELECT 56MF
C718	1-107-826-11	s	CAPACITOR,CHIP CERAMIC 0.1MF
C719	1-162-970-11	s	CAPACITOR CERAMIC 0.01MF/25V B
C720	1-113-985-11	s	CAPACITOR,TANTALUM 10MF/20V
C721	1-165-176-11	s	CAPACITOR,CERAMIC 47000PF/16V
C722	1-124-779-00	s	CAPACITOR,ELECT 10MF/16V
C723	1-165-176-11	s	CAPACITOR,CERAMIC 47000PF/16V
C724	1-165-176-11	s	CAPACITOR,CERAMIC 47000PF/16V
C726	1-135-347-11	s	CAP, SOLID ELECT 82MF
C727	1-107-826-11	s	CAPACITOR,CHIP CERAMIC 0.1MF
CN101	1-785-306-21	o	CONNECTOR, BOARD TO BOARD
CN102	1-770-620-21	s	PIN, CONNECTOR 3P
CN103	1-770-622-21	s	PIN, CONNECTOR 5P
CN104	1-785-306-21	o	CONNECTOR, BOARD TO BOARD
CN105	1-785-306-21	o	CONNECTOR, BOARD TO BOARD
CN106	1-770-619-11	o	PIN, CONNECTOR 2P
CN107	1-770-625-21	s	PIN, CONNECTOR 8P
CN108	1-580-055-21	o	PIN, CONNECTOR 2P
CN109	1-770-622-21	s	PIN, CONNECTOR 5P
CN110	1-778-965-21	s	PIN, CONNECTOR (PC BOARD) 12P
CN201	1-779-884-11	s	PLUG, CONNECTOR 4P
CN402	1-779-730-11	s	CONNECTOR, FFC/FPC (ZIF) 24P
CN502	1-779-730-11	s	CONNECTOR, FFC/FPC (ZIF) 24P
CN602	1-779-730-11	s	CONNECTOR, FFC/FPC (ZIF) 24P
CN701	1-770-625-21	s	PIN, CONNECTOR 8P

(C BOARD ;for VPL-CS4)

Ref. No. or Q'ty	Part No.	SP	Description
D102	8-719-073-11	s	DIODE BZA456A
D103	8-719-073-11	s	DIODE BZA456A
D104	8-719-045-61	s	DIODE SEC1901C
D105	8-719-045-61	s	DIODE SEC1901C
D106	8-719-045-61	s	DIODE SEC1901C
D107	8-719-045-51	s	DIODE SEC2422C
D108	8-719-073-11	s	DIODE BZA456A
D201	8-719-914-43	s	DIODE DAN202K
D301	8-719-988-61	s	DIODE 1SS355TE-17
FB101	1-414-921-11	s	INDUCTOR, FERRITE BEAD
FB102	1-414-921-11	s	INDUCTOR, FERRITE BEAD
FB103	1-414-921-11	s	INDUCTOR, FERRITE BEAD
FB104	1-500-451-11	s	MICRO INDUCTOR (CHIP) 41P750S
FB105	1-414-921-11	s	INDUCTOR, FERRITE BEAD
FB106	1-414-921-11	s	INDUCTOR, FERRITE BEAD
FB107	1-414-921-11	s	INDUCTOR, FERRITE BEAD
FB108	1-414-921-11	s	INDUCTOR, FERRITE BEAD
FB109	1-414-921-11	s	INDUCTOR, FERRITE BEAD
FB110	1-414-921-11	s	INDUCTOR, FERRITE BEAD
FB111	1-414-921-11	s	INDUCTOR, FERRITE BEAD
FB112	1-414-921-11	s	INDUCTOR, FERRITE BEAD
FB113	1-414-921-11	s	INDUCTOR, FERRITE BEAD
FB114	1-414-921-11	s	INDUCTOR, FERRITE BEAD
FB119	1-500-451-11	s	MICRO INDUCTOR (CHIP) 41P750S
FB120	1-500-451-11	s	MICRO INDUCTOR (CHIP) 41P750S
FB121	1-500-451-11	s	MICRO INDUCTOR (CHIP) 41P750S
FB122	1-500-451-11	s	MICRO INDUCTOR (CHIP) 41P750S
FB123	1-500-451-11	s	MICRO INDUCTOR (CHIP) 41P750S
FB124	1-500-451-11	s	MICRO INDUCTOR (CHIP) 41P750S
FB201	1-414-921-11	s	INDUCTOR, FERRITE BEAD
FB202	1-414-921-11	s	INDUCTOR, FERRITE BEAD
FB206	1-414-921-11	s	INDUCTOR, FERRITE BEAD
FB208	1-414-921-11	s	INDUCTOR, FERRITE BEAD
FB301	1-414-921-11	s	INDUCTOR, FERRITE BEAD
FB302	1-414-921-11	s	INDUCTOR, FERRITE BEAD
FB303	1-414-921-11	s	INDUCTOR, FERRITE BEAD
FB401	1-414-921-11	s	INDUCTOR, FERRITE BEAD
FB402	1-414-921-11	s	INDUCTOR, FERRITE BEAD
FB403	1-414-921-11	s	INDUCTOR, FERRITE BEAD
FB405	1-414-921-11	s	INDUCTOR, FERRITE BEAD
FB501	1-414-921-11	s	INDUCTOR, FERRITE BEAD
FB502	1-414-921-11	s	INDUCTOR, FERRITE BEAD
FB503	1-414-921-11	s	INDUCTOR, FERRITE BEAD
FB601	1-414-921-11	s	INDUCTOR, FERRITE BEAD
FB602	1-414-921-11	s	INDUCTOR, FERRITE BEAD
FB603	1-414-921-11	s	INDUCTOR, FERRITE BEAD
FB701	1-414-921-11	s	INDUCTOR, FERRITE BEAD
FB702	1-414-921-11	s	INDUCTOR, FERRITE BEAD
FB703	1-414-921-11	s	INDUCTOR, FERRITE BEAD
IC101	8-759-388-31	s	IC PQ20VZ1U
IC102	8-759-460-81	s	IC BA12FP-E2
IC103	8-759-485-79	s	IC TC7SET08FU (TE85L)
IC104	8-759-447-77	s	IC TC7WH74FU (TE12R)
IC105	8-759-485-79	s	IC TC7SET08FU (TE85L)
IC106	8-759-582-37	s	IC PQ2TZ15U
IC107	8-759-533-85	s	IC L88M05T-FA-TL
IC201	8-759-824-29	s	IC CXD9607GB
IC202	8-759-475-43	s	IC TC74LCX125FT(EL)
IC203	8-759-449-58	s	IC LM7131BCM5X

(C BOARD ;for VPL-CS4)

Ref. No. or Q'ty	Part No.	SP	Description
IC204 *a	8-759-679-58	s	IC SN74AHCT541PWR
*b	8-759-683-83	s	IC 74VHCT541AMTCX
IC205 *a	8-759-679-58	s	IC SN74AHCT541PWR
*b	8-759-683-83	s	IC 74VHCT541AMTCX
IC206 *a	8-759-679-58	s	IC SN74AHCT541PWR
*b	8-759-683-83	s	IC 74VHCT541AMTCX
IC207	8-759-544-01	s	IC S-80828ANNP-EDR-T2
IC208	----------		IC M24C64-WMN6T(A)

Note If this IC has failed, replace the whole C board.

IC209	8-759-082-57	s	IC TC7W04FU
IC210	8-759-447-77	s	IC TC7WH74FU (TE12R)
IC301	8-759-645-13	s	IC ADV7123KST140
IC302	8-759-584-86	s	IC M52749FP-TP
IC303	8-759-571-03	s	IC LM4041DIM3-1.2(T&R)
IC304	8-759-542-46	s	IC M62392FP
IC401	8-752-093-18	s	IC CXA3512R-T6
IC403	8-759-252-41	s	IC TK11900MTL
IC501	8-752-093-18	s	IC CXA3512R-T6
IC601	8-752-093-18	s	IC CXA3512R-T6
IC701	8-759-702-02	s	IC NJM062M
IC702	8-759-702-02	s	IC NJM062M
IC703	8-752-091-06	s	IC CXA1846BN-T4
IC704	8-759-533-85	s	IC L88M05T-FA-TL
L201	1-469-525-91	s	INDUCTOR 10UH (NLFV25)
L301	1-469-525-91	s	INDUCTOR 10UH (NLFV25)
L302	1-469-525-91	s	INDUCTOR 10UH (NLFV25)
L303	1-469-525-91	s	INDUCTOR 10UH (NLFV25)
L304	1-469-525-91	s	INDUCTOR 10UH (NLFV25)
L305	1-469-525-91	s	INDUCTOR 10UH (NLFV25)
L401	1-410-369-11	s	INDUCTOR,CHIP 1UH (3225)
L402	1-410-369-11	s	INDUCTOR,CHIP 1UH (3225)
L501	1-410-369-11	s	INDUCTOR,CHIP 1UH (3225)
L502	1-410-369-11	s	INDUCTOR,CHIP 1UH (3225)
L601	1-410-369-11	s	INDUCTOR,CHIP 1UH (3225)
L602	1-410-369-11	s	INDUCTOR,CHIP 1UH (3225)
L701	1-412-028-11	s	INDUCTOR,CHIP 4.7UH (3225)
L702	1-412-028-11	s	INDUCTOR,CHIP 4.7UH (3225)
Q101	8-729-028-91	s	TRANSISTOR DTA144EUA-T106
Q201	8-729-230-49	s	TRANSISTOR 2SC2712-YG
Q202	8-729-026-49	s	TRANSISTOR 2SA1037AK-T146-R
Q203	8-729-202-38	s	TRANSISTOR 2SC3326N-A
Q204	8-729-202-38	s	TRANSISTOR 2SC3326N-A
Q301	8-729-112-65	s	TRANSISTOR 2SA1462
Q302	8-729-112-65	s	TRANSISTOR 2SA1462
Q303	8-729-112-65	s	TRANSISTOR 2SA1462
Q304	8-729-112-65	s	TRANSISTOR 2SA1462
Q401	8-729-013-28	s	TRANSISTOR HN1B01FU-TE85R
Q402	8-729-013-28	s	TRANSISTOR HN1B01FU-TE85R
Q501	8-729-013-28	s	TRANSISTOR HN1B01FU-TE85R
Q502	8-729-013-28	s	TRANSISTOR HN1B01FU-TE85R
Q601	8-729-013-28	s	TRANSISTOR HN1B01FU-TE85R
Q602	8-729-013-28	s	TRANSISTOR HN1B01FU-TE85R
Q701	8-729-907-00	s	TRANSISTOR DTC114EU
Q702	8-729-907-00	s	TRANSISTOR DTC114EU
Q703	8-729-013-28	s	TRANSISTOR HN1B01FU-TE85R
R101	1-216-864-11	s	CONDUCTOR, CHIP (1608)
R102	1-216-833-11	s	RESISTOR,CHIP 10K 1/16W (1608)
R103	1-218-723-11	s	RESISTOR,CHIP 20K 1/16W(1608)
R104	1-218-714-11	s	RESISTOR,CHIP 8.2K 1/16W(1608)

(C BOARD ;for VPL-CS4)

Ref. No. or Q'ty	Part No.	SP	Description
R105	1-216-829-11	s	RESISTOR,CHIP 4.7K 1/16W(1608)
R106	1-218-685-11	s	RESISTOR,CHIP 510 1/16W
R107	1-218-692-11	s	RESISTOR,CHIP 1.0K 1/16W(1608)
R108	1-216-833-11	s	RESISTOR,CHIP 10K 1/16W (1608)
R110	1-216-809-11	s	RESISTOR,CHIP 100 1/16W 1608
R111	1-218-692-11	s	RESISTOR,CHIP 1.0K 1/16W(1608)
R112	1-216-809-11	s	RESISTOR,CHIP 100 1/16W 1608
R113	1-216-809-11	s	RESISTOR,CHIP 100 1/16W 1608
R118	1-216-809-11	s	RESISTOR,CHIP 100 1/16W 1608
R119	1-216-809-11	s	RESISTOR,CHIP 100 1/16W 1608
R120	1-216-805-11	s	RESISTOR,CHIP 47 1/16W 1608
R121	1-216-805-11	s	RESISTOR,CHIP 47 1/16W 1608
R123	1-216-805-11	s	RESISTOR,CHIP 47 1/16W 1608
R125	1-216-805-11	s	RESISTOR,CHIP 47 1/16W 1608
R127	1-216-815-11	s	RESISTOR,CHIP 330 1/16W 1608
R128	1-216-815-11	s	RESISTOR,CHIP 330 1/16W 1608
R129	1-216-815-11	s	RESISTOR,CHIP 330 1/16W 1608
R130	1-216-815-11	s	RESISTOR,CHIP 330 1/16W 1608
R131	1-216-821-11	s	RESISTOR,CHIP 1.0K 1/16W(1608)
R132	1-216-815-11	s	RESISTOR,CHIP 330 1/16W 1608
R134	1-216-864-11	s	CONDUCTOR, CHIP (1608)
R135	1-216-864-11	s	CONDUCTOR, CHIP (1608)
R201	1-216-839-11	s	RESISTOR,CHIP 33K 1/16W 1608
R202	1-216-833-11	s	RESISTOR,CHIP 10K 1/16W (1608)
R203	1-216-809-11	s	RESISTOR,CHIP 100 1/16W 1608
R204	1-216-809-11	s	RESISTOR,CHIP 100 1/16W 1608
R205	1-216-809-11	s	RESISTOR,CHIP 100 1/16W 1608
R206	1-216-809-11	s	RESISTOR,CHIP 100 1/16W 1608
R207	1-216-809-11	s	RESISTOR,CHIP 100 1/16W 1608
R208	1-216-809-11	s	RESISTOR,CHIP 100 1/16W 1608
R209	1-216-841-11	s	RESISTOR, CHIP 47K 1/16W 1608
R210	1-216-821-11	s	RESISTOR,CHIP 1.0K 1/16W(1608)
R211	1-216-833-11	s	RESISTOR,CHIP 10K 1/16W (1608)
R212	1-216-828-11	s	RESISTOR, CHIP 3.9K 1/16W 1608
R213	1-216-828-11	s	RESISTOR, CHIP 3.9K 1/16W 1608
R214	1-216-805-11	s	RESISTOR,CHIP 47 1/16W 1608
R215	1-216-805-11	s	RESISTOR,CHIP 47 1/16W 1608
R216	1-216-805-11	s	RESISTOR,CHIP 47 1/16W 1608
R217	1-216-805-11	s	RESISTOR,CHIP 47 1/16W 1608
R218	1-216-805-11	s	RESISTOR,CHIP 47 1/16W 1608
R219	1-216-805-11	s	RESISTOR,CHIP 47 1/16W 1608
R220	1-216-829-11	s	RESISTOR,CHIP 4.7K 1/16W(1608)
R221	1-216-829-11	s	RESISTOR,CHIP 4.7K 1/16W(1608)
R222	1-216-825-11	s	RESISTOR,CHIP 2.2K 1/16W 1608
R223	1-216-825-11	s	RESISTOR,CHIP 2.2K 1/16W 1608
R224	1-216-805-11	s	RESISTOR,CHIP 47 1/16W 1608
R225	1-216-805-11	s	RESISTOR,CHIP 47 1/16W 1608
R226	1-216-845-11	s	RESISTOR,CHIP 100K 1/16W(1608)
R227	1-216-845-11	s	RESISTOR,CHIP 100K 1/16W(1608)
R228	1-216-817-11	s	RESISTOR,CHIP 470 1/16W 1608
R229	1-216-805-11	s	RESISTOR,CHIP 47 1/16W 1608
R230	1-216-814-11	s	RESISTOR,CHIP 270 1/16W 1608
R231	1-216-864-11	s	CONDUCTOR, CHIP (1608)
R233	1-216-864-11	s	CONDUCTOR, CHIP (1608)
R234	1-216-864-11	s	CONDUCTOR, CHIP (1608)
R235	1-216-833-11	s	RESISTOR,CHIP 10K 1/16W (1608)
R236	1-216-833-11	s	RESISTOR,CHIP 10K 1/16W (1608)
R238	1-216-864-11	s	CONDUCTOR, CHIP (1608)
R239	1-216-864-11	s	CONDUCTOR, CHIP (1608)

(C BOARD ;for VPL-CS4)

Ref. No. or Q'ty	Part No.	SP	Description
R241	1-216-864-11	s	CONDUCTOR, CHIP (1608)
R301	1-216-809-11	s	RESISTOR,CHIP 100 1/16W 1608
R302	1-216-809-11	s	RESISTOR,CHIP 100 1/16W 1608
R303	1-216-816-11	s	RESISTOR, CHIP 390 1/16W 1608
R304	1-216-809-11	s	RESISTOR,CHIP 100 1/16W 1608
R305	1-216-808-11	s	RESISTOR,CHIP 82 1/16W 1608
R306	1-216-841-11	s	RESISTOR, CHIP 47K 1/16W 1608
R307	1-216-819-11	s	RESISTOR,CHIP 680 1/16W 1608
R309	1-218-665-11	s	RESISTOR,CHIP 75 1/16W (1608)
R310	1-216-057-00	s	RESISTOR CHIP 2.2K 1/10W(2012)
R311	1-216-057-00	s	RESISTOR CHIP 2.2K 1/10W(2012)
R312	1-216-797-11	s	RESISTOR,CHIP 10 1/16W 1608
R313	1-216-833-11	s	RESISTOR,CHIP 10K 1/16W (1608)
R314	1-216-816-11	s	RESISTOR, CHIP 390 1/16W 1608
R315	1-216-853-11	s	RESISTOR,CHIP 470K 1/16W(1608)
R317	1-216-808-11	s	RESISTOR,CHIP 82 1/16W 1608
R318	1-216-797-11	s	RESISTOR,CHIP 10 1/16W 1608
R319	1-218-665-11	s	RESISTOR,CHIP 75 1/16W (1608)
R320	1-216-819-11	s	RESISTOR,CHIP 680 1/16W 1608
R322	1-216-057-00	s	RESISTOR CHIP 2.2K 1/10W(2012)
R323	1-216-057-00	s	RESISTOR CHIP 2.2K 1/10W(2012)
R324	1-216-797-11	s	RESISTOR,CHIP 10 1/16W 1608
R325	1-216-816-11	s	RESISTOR, CHIP 390 1/16W 1608
R326	1-218-665-11	s	RESISTOR,CHIP 75 1/16W (1608)
R327	1-216-819-11	s	RESISTOR,CHIP 680 1/16W 1608
R328	1-216-808-11	s	RESISTOR,CHIP 82 1/16W 1608
R329	1-216-057-00	s	RESISTOR CHIP 2.2K 1/10W(2012)
R330	1-216-057-00	s	RESISTOR CHIP 2.2K 1/10W(2012)
R331	1-218-688-11	s	RESISTOR,CHIP 680 1/16W(1608)
R332	1-216-809-11	s	RESISTOR,CHIP 100 1/16W 1608
R333	1-216-827-11	s	RESISTOR, CHIP 3.3K 1/16W 1608
R334	1-216-809-11	s	RESISTOR,CHIP 100 1/16W 1608
R335	1-216-809-11	s	RESISTOR,CHIP 100 1/16W 1608
R336	1-218-710-11	s	RESISTOR,CHIP 5.6K 1/16W(1608)
R337	1-218-716-11	s	RESISTOR,CHIP 10K 1/16W(1608)
R338	1-216-805-11	s	RESISTOR,CHIP 47 1/16W 1608
R339	1-216-805-11	s	RESISTOR,CHIP 47 1/16W 1608
R340	1-216-805-11	s	RESISTOR,CHIP 47 1/16W 1608
R341	1-216-805-11	s	RESISTOR,CHIP 47 1/16W 1608
R342	1-216-805-11	s	RESISTOR,CHIP 47 1/16W 1608
R404	1-218-699-11	s	RESISTOR,CHIP 2.0K 1/16W(1608)
R405	1-216-805-11	s	RESISTOR,CHIP 47 1/16W 1608
R406	1-218-706-11	s	RESISTOR,CHIP 3.9K 1/16W(1608)
R407	1-216-864-11	s	CONDUCTOR, CHIP (1608)
R409	1-216-864-11	s	CONDUCTOR, CHIP (1608)
R411	1-216-809-11	s	RESISTOR,CHIP 100 1/16W 1608
R417	1-216-864-11	s	CONDUCTOR, CHIP (1608)
R418	1-216-864-11	s	CONDUCTOR, CHIP (1608)
R421	1-216-864-11	s	CONDUCTOR, CHIP (1608)
R422	1-216-864-11	s	CONDUCTOR, CHIP (1608)
R423	1-216-864-11	s	CONDUCTOR, CHIP (1608)
R424	1-216-864-11	s	CONDUCTOR, CHIP (1608)
R425	1-216-809-11	s	RESISTOR,CHIP 100 1/16W 1608
R426	1-216-825-11	s	RESISTOR,CHIP 2.2K 1/16W 1608
R427	1-216-825-11	s	RESISTOR,CHIP 2.2K 1/16W 1608
R428	1-218-720-11	s	RESISTOR,CHIP 15K 1/16W(1608)
R429	1-216-789-11	s	RESISTOR,CHIP 2.2 1/16W(1608)
R430	1-216-789-11	s	RESISTOR,CHIP 2.2 1/16W(1608)
R431	1-216-864-11	s	CONDUCTOR, CHIP (1608)

(C BOARD ;for VPL-CS4)

Ref. No. or Q'ty	Part No.	SP	Description
R432	1-218-744-11	s	RESISTOR,CHIP 150K 1/16W
R434	1-216-833-11	s	RESISTOR,CHIP 10K 1/16W (1608)
R436	1-218-699-11	s	RESISTOR,CHIP 2.0K 1/16W(1608)
R437	1-218-706-11	s	RESISTOR,CHIP 3.9K 1/16W(1608)
R504	1-216-805-11	s	RESISTOR,CHIP 47 1/16W 1608
R505	1-218-699-11	s	RESISTOR,CHIP 2.0K 1/16W(1608)
R506	1-218-706-11	s	RESISTOR,CHIP 3.9K 1/16W(1608)
R509	1-216-864-11	s	CONDUCTOR, CHIP (1608)
R511	1-216-809-11	s	RESISTOR,CHIP 100 1/16W 1608
R517	1-216-864-11	s	CONDUCTOR, CHIP (1608)
R518	1-216-864-11	s	CONDUCTOR, CHIP (1608)
R521	1-216-864-11	s	CONDUCTOR, CHIP (1608)
R522	1-216-864-11	s	CONDUCTOR, CHIP (1608)
R523	1-216-864-11	s	CONDUCTOR, CHIP (1608)
R524	1-216-864-11	s	CONDUCTOR, CHIP (1608)
R525	1-216-809-11	s	RESISTOR,CHIP 100 1/16W 1608
R526	1-216-825-11	s	RESISTOR,CHIP 2.2K 1/16W 1608
R527	1-216-825-11	s	RESISTOR,CHIP 2.2K 1/16W 1608
R528	1-216-789-11	s	RESISTOR,CHIP 2.2 1/16W(1608)
R529	1-216-789-11	s	RESISTOR,CHIP 2.2 1/16W(1608)
R530	1-216-864-11	s	CONDUCTOR, CHIP (1608)
R532	1-216-833-11	s	RESISTOR,CHIP 10K 1/16W (1608)
R534	1-218-699-11	s	RESISTOR,CHIP 2.0K 1/16W(1608)
R535	1-218-706-11	s	RESISTOR,CHIP 3.9K 1/16W(1608)
R604	1-218-699-11	s	RESISTOR,CHIP 2.0K 1/16W(1608)
R605	1-216-805-11	s	RESISTOR,CHIP 47 1/16W 1608
R606	1-218-706-11	s	RESISTOR,CHIP 3.9K 1/16W(1608)
R609	1-216-864-11	s	CONDUCTOR, CHIP (1608)
R611	1-216-809-11	s	RESISTOR,CHIP 100 1/16W 1608
R617	1-216-864-11	s	CONDUCTOR, CHIP (1608)
R618	1-216-864-11	s	CONDUCTOR, CHIP (1608)
R621	1-216-864-11	s	CONDUCTOR, CHIP (1608)
R622	1-216-864-11	s	CONDUCTOR, CHIP (1608)
R623	1-216-864-11	s	CONDUCTOR, CHIP (1608)
R624	1-216-864-11	s	CONDUCTOR, CHIP (1608)
R625	1-216-809-11	s	RESISTOR,CHIP 100 1/16W 1608
R626	1-216-825-11	s	RESISTOR,CHIP 2.2K 1/16W 1608
R627	1-216-825-11	s	RESISTOR,CHIP 2.2K 1/16W 1608
R628	1-216-789-11	s	RESISTOR,CHIP 2.2 1/16W(1608)
R629	1-216-789-11	s	RESISTOR,CHIP 2.2 1/16W(1608)
R630	1-216-864-11	s	CONDUCTOR, CHIP (1608)
R632	1-216-833-11	s	RESISTOR,CHIP 10K 1/16W (1608)
R634	1-218-699-11	s	RESISTOR,CHIP 2.0K 1/16W(1608)
R635	1-218-706-11	s	RESISTOR,CHIP 3.9K 1/16W(1608)
R701	1-216-833-11	s	RESISTOR,CHIP 10K 1/16W (1608)
R702	1-217-671-11	s	RESISTOR CHIP 1 1/10W(2125)
R703	1-216-841-11	s	RESISTOR, CHIP 47K 1/16W 1608
R704	1-216-824-11	s	RESISTOR, CHIP 1.8K 1/16W 1608
R705	1-216-841-11	s	RESISTOR, CHIP 47K 1/16W 1608
R706	1-216-814-11	s	RESISTOR,CHIP 270 1/16W 1608
R707	1-216-864-11	s	CONDUCTOR, CHIP (1608)
R709	1-216-864-11	s	CONDUCTOR, CHIP (1608)
R710	1-216-833-11	s	RESISTOR,CHIP 10K 1/16W (1608)
R711	1-216-841-11	s	RESISTOR, CHIP 47K 1/16W 1608
R712	1-217-671-11	s	RESISTOR CHIP 1 1/10W(2125)
R713	1-216-841-11	s	RESISTOR, CHIP 47K 1/16W 1608
R714	1-216-824-11	s	RESISTOR, CHIP 1.8K 1/16W 1608
R715	1-216-829-11	s	RESISTOR,CHIP 4.7K 1/16W(1608)
R716	1-216-864-11	s	CONDUCTOR, CHIP (1608)

(C BOARD ;for VPL-CS4)

Ref. No. or Q'ty	Part No.	SP	Description
R718	1-216-864-11	s	CONDUCTOR, CHIP (1608)
R719	1-216-809-11	s	RESISTOR,CHIP 100 1/16W 1608
R720	1-216-809-11	s	RESISTOR,CHIP 100 1/16W 1608
R721	1-216-809-11	s	RESISTOR,CHIP 100 1/16W 1608
R722	1-216-823-11	s	RESISTOR, CHIP 1.5K 1/16W
R723	1-216-827-11	s	RESISTOR, CHIP 3.3K 1/16W 1608
R724	1-216-845-11	s	RESISTOR,CHIP 100K 1/16W(1608)
R725	1-216-833-11	s	RESISTOR,CHIP 10K 1/16W (1608)
R726	1-216-829-11	s	RESISTOR,CHIP 4.7K 1/16W(1608)
R727	1-216-829-11	s	RESISTOR,CHIP 4.7K 1/16W(1608)
R728	1-216-829-11	s	RESISTOR,CHIP 4.7K 1/16W(1608)
R729	1-216-814-11	s	RESISTOR,CHIP 270 1/16W 1608
RB101	1-233-576-11	s	RESISTOR,CHIP NETWORK 100
RB102	1-233-576-11	s	RESISTOR,CHIP NETWORK 100
RB103	1-233-576-11	s	RESISTOR,CHIP NETWORK 100
RB104	1-233-576-11	s	RESISTOR,CHIP NETWORK 100
RB201	1-233-576-11	s	RESISTOR,CHIP NETWORK 100
RB202	1-233-576-11	s	RESISTOR,CHIP NETWORK 100
RB203	1-233-576-11	s	RESISTOR,CHIP NETWORK 100
RB204	1-233-576-11	s	RESISTOR,CHIP NETWORK 100
RB205	1-233-576-11	s	RESISTOR,CHIP NETWORK 100
RB206	1-233-576-11	s	RESISTOR,CHIP NETWORK 100
RB207	1-233-575-11	s	RES, CHIP NETWORK 22
RB208	1-233-575-11	s	RES, CHIP NETWORK 22
RB209	1-233-388-11	s	FILTER, BAND PASS
RB210	1-233-388-11	s	FILTER, BAND PASS
RB211	1-233-575-11	s	RES, CHIP NETWORK 22
RB212	1-233-575-11	s	RES, CHIP NETWORK 22
RB301	1-233-576-11	s	RESISTOR,CHIP NETWORK 100
RB302	1-233-576-11	s	RESISTOR,CHIP NETWORK 100
RB303	1-233-576-11	s	RESISTOR,CHIP NETWORK 100
S201	*a 1-771-337-21	s	SWITCH, SLIDE
	*b 1-571-674-11	s	SWITCH,SLIDE (2-2-2)
TH101	1-808-656-11	s	THERMISTOR
TP103	1-535-757-11	s	CHIP, CHECKER (CONNECTOR)
TP104	1-535-757-11	s	CHIP, CHECKER (CONNECTOR)
TP108	1-535-757-11	s	CHIP, CHECKER (CONNECTOR)
TP109	1-535-757-11	s	CHIP, CHECKER (CONNECTOR)
TP110	1-535-757-11	s	CHIP, CHECKER (CONNECTOR)
TP111	1-535-757-11	s	CHIP, CHECKER (CONNECTOR)
TP112	1-535-757-11	s	CHIP, CHECKER (CONNECTOR)
TP113	1-535-757-11	s	CHIP, CHECKER (CONNECTOR)
TP115	1-535-757-11	s	CHIP, CHECKER (CONNECTOR)
TP116	1-535-757-11	s	CHIP, CHECKER (CONNECTOR)
TP117	1-535-757-11	s	CHIP, CHECKER (CONNECTOR)
TP201	1-535-757-11	s	CHIP, CHECKER (CONNECTOR)
TP202	1-535-757-11	s	CHIP, CHECKER (CONNECTOR)
TP203	1-535-757-11	s	CHIP, CHECKER (CONNECTOR)
TP204	1-535-757-11	s	CHIP, CHECKER (CONNECTOR)
TP205	1-535-757-11	s	CHIP, CHECKER (CONNECTOR)
TP206	1-535-757-11	s	CHIP, CHECKER (CONNECTOR)
TP207	1-535-757-11	s	CHIP, CHECKER (CONNECTOR)
TP208	1-535-757-11	s	CHIP, CHECKER (CONNECTOR)
TP209	1-535-757-11	s	CHIP, CHECKER (CONNECTOR)
TP210	1-535-757-11	s	CHIP, CHECKER (CONNECTOR)
TP211	1-535-757-11	s	CHIP, CHECKER (CONNECTOR)
TP212	1-535-757-11	s	CHIP, CHECKER (CONNECTOR)

(C BOARD ;for VPL-CS4)

Ref. No. or Q'ty	Part No.	SP	Description
TP213	1-535-757-11	s	CHIP, CHECKER (CONNECTOR)
TP301	1-535-757-11	s	CHIP, CHECKER (CONNECTOR)
TP302	1-535-757-11	s	CHIP, CHECKER (CONNECTOR)
TP303	1-535-757-11	s	CHIP, CHECKER (CONNECTOR)
TP304	1-535-757-11	s	CHIP, CHECKER (CONNECTOR)
TP401	1-535-757-11	s	CHIP, CHECKER (CONNECTOR)
TP402	1-535-757-11	s	CHIP, CHECKER (CONNECTOR)
TP403	1-535-757-11	s	CHIP, CHECKER (CONNECTOR)
TP406	1-535-757-11	s	CHIP, CHECKER (CONNECTOR)
TP501	1-535-757-11	s	CHIP, CHECKER (CONNECTOR)
TP502	1-535-757-11	s	CHIP, CHECKER (CONNECTOR)
TP505	1-535-757-11	s	CHIP, CHECKER (CONNECTOR)
TP601	1-535-757-11	s	CHIP, CHECKER (CONNECTOR)
TP602	1-535-757-11	s	CHIP, CHECKER (CONNECTOR)
TP605	1-535-757-11	s	CHIP, CHECKER (CONNECTOR)
TP701	1-535-757-11	s	CHIP, CHECKER (CONNECTOR)
TP702	1-535-757-11	s	CHIP, CHECKER (CONNECTOR)

C BOARD ;for VPL-CX4

---

*a:[Serial No. 10001 - 5000000 ;for VPL-CX4]
*b:[Serial No. 5000001 - ;for VPL-CX4]

Ref. No. or Q'ty	Part No.	SP	Description
1pc	*a A-1300-315-A	s	MOUNTED CIRCUIT BOARD, C
1pc	*b A-1335-151-A	s	MOUNTED CIRCUIT BOARD, C
C101	1-131-998-11	s	CAP, SOLID ELECT 82MF 6.3 V
C102	1-164-156-11	s	CAPACITOR,CERAMIC 0.1MF/25V F
C103	1-126-204-11	s	CAPACITOR, ELECT 47MF/16V(CHIP
C104	1-128-992-11	s	CAPACITOR ELECT 47MF 25V
C106	1-107-826-11	s	CAPACITOR,CHIP CERAMIC 0.1MF
C107	1-162-970-11	s	CAPACITOR CERAMIC 0.01MF/25V B
C108	1-162-970-11	s	CAPACITOR CERAMIC 0.01MF/25V B
C110	1-126-205-11	s	CAPACITOR,ELECT 47M/6.3
C111	1-162-970-11	s	CAPACITOR CERAMIC 0.01MF/25V B
C112	1-107-826-11	s	CAPACITOR,CHIP CERAMIC 0.1MF
C113	1-107-826-11	s	CAPACITOR,CHIP CERAMIC 0.1MF
C114	1-126-205-11	s	CAPACITOR,ELECT 47M/6.3
C115	1-107-826-11	s	CAPACITOR,CHIP CERAMIC 0.1MF
C116	1-107-826-11	s	CAPACITOR,CHIP CERAMIC 0.1MF
C117	1-164-156-11	s	CAPACITOR,CERAMIC 0.1MF/25V F
C118	1-126-205-11	s	CAPACITOR,ELECT 47M/6.3
C119	1-107-826-11	s	CAPACITOR,CHIP CERAMIC 0.1MF
C122	1-164-156-11	s	CAPACITOR,CERAMIC 0.1MF/25V F
C123	1-107-826-11	s	CAPACITOR,CHIP CERAMIC 0.1MF
C124	1-128-995-11	s	CAPACITOR ELECT 100MF / 10 V
C201	1-107-826-11	s	CAPACITOR,CHIP CERAMIC 0.1MF
C202	1-109-982-11	s	CAPACITOR,CHIP CERAMIC 1MF/10V
C203	1-107-826-11	s	CAPACITOR,CHIP CERAMIC 0.1MF
C205	1-162-970-11	s	CAPACITOR CERAMIC 0.01MF/25V B
C206	1-107-826-11	s	CAPACITOR,CHIP CERAMIC 0.1MF
C207	1-107-826-11	s	CAPACITOR,CHIP CERAMIC 0.1MF
C208	1-107-826-11	s	CAPACITOR,CHIP CERAMIC 0.1MF
C209	1-107-826-11	s	CAPACITOR,CHIP CERAMIC 0.1MF
C210	1-107-826-11	s	CAPACITOR,CHIP CERAMIC 0.1MF
C211	1-107-826-11	s	CAPACITOR,CHIP CERAMIC 0.1MF
C212	1-107-826-11	s	CAPACITOR,CHIP CERAMIC 0.1MF
C213	1-107-826-11	s	CAPACITOR,CHIP CERAMIC 0.1MF
C214	1-107-826-11	s	CAPACITOR,CHIP CERAMIC 0.1MF
C215	1-126-205-11	s	CAPACITOR,ELECT 47M/6.3
C216	1-107-826-11	s	CAPACITOR,CHIP CERAMIC 0.1MF
C217	1-107-826-11	s	CAPACITOR,CHIP CERAMIC 0.1MF
C218	1-162-910-11	s	CAPACITOR,CERAMIC 5PF/50V 1608
C219	1-126-205-11	s	CAPACITOR,ELECT 47M/6.3
C220	1-107-826-11	s	CAPACITOR,CHIP CERAMIC 0.1MF
C221	1-107-826-11	s	CAPACITOR,CHIP CERAMIC 0.1MF
C222	1-107-826-11	s	CAPACITOR,CHIP CERAMIC 0.1MF
C301	1-162-970-11	s	CAPACITOR CERAMIC 0.01MF/25V B
C302	1-126-205-11	s	CAPACITOR,ELECT 47M/6.3
C303	1-107-826-11	s	CAPACITOR,CHIP CERAMIC 0.1MF
C304	1-124-779-00	s	CAPACITOR,ELECT 10MF/16V
C305	1-162-970-11	s	CAPACITOR CERAMIC 0.01MF/25V B
C306	1-126-602-11	s	CAPACITOR,ELECT 3.3MF/50V(CHIP
C307	1-115-467-11	s	CAPACITOR CERAMIC 0.22MF/10V B
C308	1-107-826-11	s	CAPACITOR,CHIP CERAMIC 0.1MF
C309	1-124-779-00	s	CAPACITOR,ELECT 10MF/16V
C310	1-115-467-11	s	CAPACITOR CERAMIC 0.22MF/10V B
C311	1-162-970-11	s	CAPACITOR CERAMIC 0.01MF/25V B
C312	1-126-602-11	s	CAPACITOR,ELECT 3.3MF/50V(CHIP
C313	1-124-779-00	s	CAPACITOR,ELECT 10MF/16V

(C BOARD ;for VPL-CX4)

Ref. No. or Q'ty	Part No.	SP	Description
C314	1-107-826-11	s	CAPACITOR,CHIP CERAMIC 0.1MF
C315	1-162-970-11	s	CAPACITOR CERAMIC 0.01MF/25V B
C316	1-126-602-11	s	CAPACITOR,ELECT 3.3MF/50V(CHIP
C317	1-162-970-11	s	CAPACITOR CERAMIC 0.01MF/25V B
C318	1-135-347-11	s	CAP, SOLID ELECT 82MF
C320	1-126-205-11	s	CAPACITOR,ELECT 47M/6.3
C321	1-107-826-11	s	CAPACITOR,CHIP CERAMIC 0.1MF
C322	1-107-826-11	s	CAPACITOR,CHIP CERAMIC 0.1MF
C323	1-164-156-11	s	CAPACITOR,CERAMIC 0.1MF/25V F
C324	1-107-826-11	s	CAPACITOR,CHIP CERAMIC 0.1MF
C325	1-126-205-11	s	CAPACITOR,ELECT 47M/6.3
C401	1-115-467-11	s	CAPACITOR CERAMIC 0.22MF/10V B
C402	1-107-826-11	s	CAPACITOR,CHIP CERAMIC 0.1MF
C403	1-107-826-11	s	CAPACITOR,CHIP CERAMIC 0.1MF
C404	1-107-826-11	s	CAPACITOR,CHIP CERAMIC 0.1MF
C405	1-127-760-11	s	CAPACITOR,CERAMIC 4.7MF/6.3V
C406	1-107-826-11	s	CAPACITOR,CHIP CERAMIC 0.1MF
C407	1-107-826-11	s	CAPACITOR,CHIP CERAMIC 0.1MF
C408	1-127-760-11	s	CAPACITOR,CERAMIC 4.7MF/6.3V
C409	1-107-826-11	s	CAPACITOR,CHIP CERAMIC 0.1MF
C410	1-162-921-11	s	CAPACITOR,CERAMIC 33PF/50V CH
C411	1-107-826-11	s	CAPACITOR,CHIP CERAMIC 0.1MF
C412	1-164-156-11	s	CAPACITOR,CERAMIC 0.1MF/25V F
C413	1-164-156-11	s	CAPACITOR,CERAMIC 0.1MF/25V F
C414	1-107-826-11	s	CAPACITOR,CHIP CERAMIC 0.1MF
C415	1-107-826-11	s	CAPACITOR,CHIP CERAMIC 0.1MF
C416	1-128-992-11	s	CAPACITOR ELECT 47MF 25V
C417	1-164-156-11	s	CAPACITOR,CERAMIC 0.1MF/25V F
C418	1-164-156-11	s	CAPACITOR,CERAMIC 0.1MF/25V F
C419	1-128-992-11	s	CAPACITOR ELECT 47MF 25V
C420	1-164-156-11	s	CAPACITOR,CERAMIC 0.1MF/25V F
C421	1-162-970-11	s	CAPACITOR CERAMIC 0.01MF/25V B
C423	1-115-340-11	s	CAPACITOR CERAMIC 0.22MF/25V B
C424	1-164-156-11	s	CAPACITOR,CERAMIC 0.1MF/25V F
C425	1-164-156-11	s	CAPACITOR,CERAMIC 0.1MF/25V F
C426	1-164-156-11	s	CAPACITOR,CERAMIC 0.1MF/25V F
C427	1-117-681-11	s	CAPACITOR, ELECT 100MF/16V
C428	1-164-156-11	s	CAPACITOR,CERAMIC 0.1MF/25V F
C429	1-115-467-11	s	CAPACITOR CERAMIC 0.22MF/10V B
C430	1-115-467-11	s	CAPACITOR CERAMIC 0.22MF/10V B
C431	1-115-467-11	s	CAPACITOR CERAMIC 0.22MF/10V B
C432	1-115-467-11	s	CAPACITOR CERAMIC 0.22MF/10V B
C501	1-115-467-11	s	CAPACITOR CERAMIC 0.22MF/10V B
C502	1-107-826-11	s	CAPACITOR,CHIP CERAMIC 0.1MF
C503	1-107-826-11	s	CAPACITOR,CHIP CERAMIC 0.1MF
C504	1-107-826-11	s	CAPACITOR,CHIP CERAMIC 0.1MF
C505	1-127-760-11	s	CAPACITOR,CERAMIC 4.7MF/6.3V
C506	1-107-826-11	s	CAPACITOR,CHIP CERAMIC 0.1MF
C507	1-107-826-11	s	CAPACITOR,CHIP CERAMIC 0.1MF
C508	1-127-760-11	s	CAPACITOR,CERAMIC 4.7MF/6.3V
C509	1-107-826-11	s	CAPACITOR,CHIP CERAMIC 0.1MF
C510	1-162-921-11	s	CAPACITOR,CERAMIC 33PF/50V CH
C511	1-107-826-11	s	CAPACITOR,CHIP CERAMIC 0.1MF
C512	1-164-156-11	s	CAPACITOR,CERAMIC 0.1MF/25V F
C513	1-164-156-11	s	CAPACITOR,CERAMIC 0.1MF/25V F
C514	1-107-826-11	s	CAPACITOR,CHIP CERAMIC 0.1MF
C515	1-107-826-11	s	CAPACITOR,CHIP CERAMIC 0.1MF
C516	1-128-992-11	s	CAPACITOR ELECT 47MF 25V
C517	1-164-156-11	s	CAPACITOR,CERAMIC 0.1MF/25V F

(C BOARD ;for VPL-CX4)

Ref. No. or Q'ty	Part No.	SP	Description
C518	1-164-156-11	s	CAPACITOR,CERAMIC 0.1MF/25V F
C519	1-128-992-11	s	CAPACITOR ELECT 47MF 25V
C520	1-164-156-11	s	CAPACITOR,CERAMIC 0.1MF/25V F
C521	1-164-156-11	s	CAPACITOR,CERAMIC 0.1MF/25V F
C522	1-164-156-11	s	CAPACITOR,CERAMIC 0.1MF/25V F
C523	1-117-681-11	s	CAPACITOR, ELECT 100MF/16V
C524	1-164-156-11	s	CAPACITOR,CERAMIC 0.1MF/25V F
C525	1-115-467-11	s	CAPACITOR CERAMIC 0.22MF/10V B
C526	1-115-467-11	s	CAPACITOR CERAMIC 0.22MF/10V B
C527	1-115-467-11	s	CAPACITOR CERAMIC 0.22MF/10V B
C528	1-115-467-11	s	CAPACITOR CERAMIC 0.22MF/10V B
C601	1-115-467-11	s	CAPACITOR CERAMIC 0.22MF/10V B
C602	1-107-826-11	s	CAPACITOR,CHIP CERAMIC 0.1MF
C603	1-107-826-11	s	CAPACITOR,CHIP CERAMIC 0.1MF
C604	1-107-826-11	s	CAPACITOR,CHIP CERAMIC 0.1MF
C605	1-127-760-11	s	CAPACITOR,CERAMIC 4.7MF/6.3V
C606	1-107-826-11	s	CAPACITOR,CHIP CERAMIC 0.1MF
C607	1-107-826-11	s	CAPACITOR,CHIP CERAMIC 0.1MF
C608	1-127-760-11	s	CAPACITOR,CERAMIC 4.7MF/6.3V
C609	1-162-970-11	s	CAPACITOR CERAMIC 0.01MF/25V B
C610	1-162-921-11	s	CAPACITOR,CERAMIC 33PF/50V CH
C611	1-107-826-11	s	CAPACITOR,CHIP CERAMIC 0.1MF
C612	1-164-156-11	s	CAPACITOR,CERAMIC 0.1MF/25V F
C613	1-164-156-11	s	CAPACITOR,CERAMIC 0.1MF/25V F
C614	1-107-826-11	s	CAPACITOR,CHIP CERAMIC 0.1MF
C615	1-107-826-11	s	CAPACITOR,CHIP CERAMIC 0.1MF
C616	1-128-992-11	s	CAPACITOR ELECT 47MF 25V
C617	1-164-156-11	s	CAPACITOR,CERAMIC 0.1MF/25V F
C618	1-164-156-11	s	CAPACITOR,CERAMIC 0.1MF/25V F
C619	1-128-992-11	s	CAPACITOR ELECT 47MF 25V
C620	1-164-156-11	s	CAPACITOR,CERAMIC 0.1MF/25V F
C621	1-164-156-11	s	CAPACITOR,CERAMIC 0.1MF/25V F
C622	1-164-156-11	s	CAPACITOR,CERAMIC 0.1MF/25V F
C623	1-117-681-11	s	CAPACITOR, ELECT 100MF/16V
C624	1-164-156-11	s	CAPACITOR,CERAMIC 0.1MF/25V F
C625	1-115-467-11	s	CAPACITOR CERAMIC 0.22MF/10V B
C626	1-115-467-11	s	CAPACITOR CERAMIC 0.22MF/10V B
C627	1-115-467-11	s	CAPACITOR CERAMIC 0.22MF/10V B
C628	1-115-467-11	s	CAPACITOR CERAMIC 0.22MF/10V B
C701	1-107-686-11	s	CAPACITOR,TANTALUM 4.7MF/16V
C702	1-107-686-11	s	CAPACITOR,TANTALUM 4.7MF/16V
C703	1-165-176-11	s	CAPACITOR,CERAMIC 47000PF/16V
C704	1-115-467-11	s	CAPACITOR CERAMIC 0.22MF/10V B
C705	1-107-826-11	s	CAPACITOR,CHIP CERAMIC 0.1MF
C706	1-165-176-11	s	CAPACITOR,CERAMIC 47000PF/16V
C707	1-109-982-11	s	CAPACITOR,CHIP CERAMIC 1MF/10V
C708	1-124-779-00	s	CAPACITOR,ELECT 10MF/16V
C709	1-113-985-11	s	CAPACITOR,TANTALUM 10MF/20V
C710	1-109-982-11	s	CAPACITOR,CHIP CERAMIC 1MF/10V
C711	1-107-686-11	s	CAPACITOR,TANTALUM 4.7MF/16V
C712	1-126-204-11	s	CAPACITOR, ELECT 47MF/16V(CHIP
C713	1-107-826-11	s	CAPACITOR,CHIP CERAMIC 0.1MF
C714	1-107-686-11	s	CAPACITOR,TANTALUM 4.7MF/16V
C715	1-165-176-11	s	CAPACITOR,CERAMIC 47000PF/16V
C716	1-115-467-11	s	CAPACITOR CERAMIC 0.22MF/10V B
C717	1-135-342-11	s	CAPACITOR,SOLID ELECT 56MF
C718	1-107-826-11	s	CAPACITOR,CHIP CERAMIC 0.1MF
C719	1-162-970-11	s	CAPACITOR CERAMIC 0.01MF/25V B
C720	1-113-985-11	s	CAPACITOR,TANTALUM 10MF/20V

(C BOARD ;for VPL-CX4)

Ref. No. or Q'ty	Part No.	SP	Description
C721	1-165-176-11	s	CAPACITOR,CERAMIC 47000PF/16V
C722	1-124-779-00	s	CAPACITOR,ELECT 10MF/16V
C723	1-165-176-11	s	CAPACITOR,CERAMIC 47000PF/16V
C724	1-165-176-11	s	CAPACITOR,CERAMIC 47000PF/16V
C726	1-135-347-11	s	CAP, SOLID ELECT 82MF
C727	1-107-826-11	s	CAPACITOR,CHIP CERAMIC 0.1MF
CN101	1-785-306-21	o	CONNECTOR, BOARD TO BOARD
CN102	1-770-620-21	s	PIN, CONNECTOR 3P
CN103	1-770-622-21	s	PIN, CONNECTOR 5P
CN104	1-785-306-21	o	CONNECTOR, BOARD TO BOARD
CN105	1-785-306-21	o	CONNECTOR, BOARD TO BOARD
CN106	1-770-619-11	o	PIN, CONNECTOR 2P
CN107	1-770-625-21	s	PIN, CONNECTOR 8P
CN108	1-580-055-21	o	PIN, CONNECTOR 2P
CN109	1-770-622-21	s	PIN, CONNECTOR 5P
CN110	1-778-965-21	s	PIN, CONNECTOR (PC BOARD) 12P
CN201	1-779-884-11	s	PLUG, CONNECTOR 4P
CN401	1-794-823-11	s	CONNECTOR (ZIF), FPC/FFC 32P
CN501	1-794-823-11	s	CONNECTOR (ZIF), FPC/FFC 32P
CN601	1-794-823-11	s	CONNECTOR (ZIF), FPC/FFC 32P
CN701	1-770-625-21	s	PIN, CONNECTOR 8P
D102	8-719-073-11	s	DIODE BZA456A
D103	8-719-073-11	s	DIODE BZA456A
D104	8-719-045-61	s	DIODE SEC1901C
D105	8-719-045-61	s	DIODE SEC1901C
D106	8-719-045-61	s	DIODE SEC1901C
D107	8-719-045-51	s	DIODE SEC2422C
D108	8-719-073-11	s	DIODE BZA456A
D201	8-719-914-43	s	DIODE DAN202K
D301	8-719-988-61	s	DIODE 1SS355TE-17
FB101	1-414-921-11	s	INDUCTOR, FERRITE BEAD
FB102	1-414-921-11	s	INDUCTOR, FERRITE BEAD
FB103	1-414-921-11	s	INDUCTOR, FERRITE BEAD
FB104	1-500-451-11	s	MICRO INDUCTOR (CHIP) 41P750S
FB105	1-414-921-11	s	INDUCTOR, FERRITE BEAD
FB106	1-414-921-11	s	INDUCTOR, FERRITE BEAD
FB107	1-414-921-11	s	INDUCTOR, FERRITE BEAD
FB108	1-414-921-11	s	INDUCTOR, FERRITE BEAD
FB109	1-414-921-11	s	INDUCTOR, FERRITE BEAD
FB110	1-414-921-11	s	INDUCTOR, FERRITE BEAD
FB111	1-414-921-11	s	INDUCTOR, FERRITE BEAD
FB112	1-414-921-11	s	INDUCTOR, FERRITE BEAD
FB113	1-414-921-11	s	INDUCTOR, FERRITE BEAD
FB114	1-414-921-11	s	INDUCTOR, FERRITE BEAD
FB119	1-500-451-11	s	MICRO INDUCTOR (CHIP) 41P750S
FB120	1-500-451-11	s	MICRO INDUCTOR (CHIP) 41P750S
FB121	1-500-451-11	s	MICRO INDUCTOR (CHIP) 41P750S
FB122	1-500-451-11	s	MICRO INDUCTOR (CHIP) 41P750S
FB123	1-500-451-11	s	MICRO INDUCTOR (CHIP) 41P750S
FB124	1-500-451-11	s	MICRO INDUCTOR (CHIP) 41P750S
FB201	1-414-921-11	s	INDUCTOR, FERRITE BEAD
FB202	1-414-921-11	s	INDUCTOR, FERRITE BEAD
FB206	1-414-921-11	s	INDUCTOR, FERRITE BEAD
FB208	1-414-921-11	s	INDUCTOR, FERRITE BEAD
FB301	1-414-921-11	s	INDUCTOR, FERRITE BEAD
FB302	1-414-921-11	s	INDUCTOR, FERRITE BEAD
FB303	1-414-921-11	s	INDUCTOR, FERRITE BEAD
FB401	1-414-921-11	s	INDUCTOR, FERRITE BEAD

(C BOARD ;for VPL-CX4)

Ref. No. or Q'ty	Part No.	SP	Description
FB402	1-414-921-11	s	INDUCTOR, FERRITE BEAD
FB403	1-414-921-11	s	INDUCTOR, FERRITE BEAD
FB405	1-414-921-11	s	INDUCTOR, FERRITE BEAD
FB501	1-414-921-11	s	INDUCTOR, FERRITE BEAD
FB502	1-414-921-11	s	INDUCTOR, FERRITE BEAD
FB503	1-414-921-11	s	INDUCTOR, FERRITE BEAD
FB601	1-414-921-11	s	INDUCTOR, FERRITE BEAD
FB602	1-414-921-11	s	INDUCTOR, FERRITE BEAD
FB603	1-414-921-11	s	INDUCTOR, FERRITE BEAD
FB701	1-414-921-11	s	INDUCTOR, FERRITE BEAD
FB702	1-414-921-11	s	INDUCTOR, FERRITE BEAD
FB703	1-414-921-11	s	INDUCTOR, FERRITE BEAD
IC101	8-759-388-31	s	IC PQ20VZ1U
IC102	8-759-460-81	s	IC BA12FP-E2
IC103	8-759-485-79	s	IC TC7SET08FU (TE85L)
IC104	8-759-447-77	s	IC TC7WH74FU (TE12R)
IC105	8-759-485-79	s	IC TC7SET08FU (TE85L)
IC106	8-759-582-37	s	IC PQ2TZ15U
IC107	8-759-533-85	s	IC L88M05T-FA-TL
IC201	8-759-824-29	s	IC CXD9607GB
IC202	8-759-475-43	s	IC TC74LCX125FT(EL)
IC203	8-759-449-58	s	IC LM7131BCM5X
IC204 *a	8-759-679-58	s	IC SN74AHCT541PWR
*b	8-759-490-41	s	IC TC74VHCT541AFT(EL)
IC205 *a	8-759-679-58	s	IC SN74AHCT541PWR
*b	8-759-490-41	s	IC TC74VHCT541AFT(EL)
IC206 *a	8-759-679-58	s	IC SN74AHCT541PWR
*b	8-759-490-41	s	IC TC74VHCT541AFT(EL)
IC207	8-759-544-01	s	IC S-80828ANNP-EDR-T2
IC208	----------		IC M24C64-WMN6T(A)

Note If this IC has failed, replace the whole C board.

IC209	8-759-082-57	s	IC TC7W04FU
IC210	8-759-447-77	s	IC TC7WH74FU (TE12R)
IC301	8-759-645-13	s	IC ADV7123KST140
IC302	8-759-584-86	s	IC M52749FP-TP
IC303	8-759-571-03	s	IC LM4041DIM3-1.2(T&R)
IC304	8-759-542-46	s	IC M62392FP
IC401	8-752-093-18	s	IC CXA3512R-T6
IC402	8-752-093-18	s	IC CXA3512R-T6
IC403	8-759-252-41	s	IC TK11900MTL
IC501	8-752-093-18	s	IC CXA3512R-T6
IC502	8-752-093-18	s	IC CXA3512R-T6
IC601	8-752-093-18	s	IC CXA3512R-T6
IC602	8-752-093-18	s	IC CXA3512R-T6
IC701	8-759-702-02	s	IC NJM062M
IC702	8-759-702-02	s	IC NJM062M
IC703	8-752-091-06	s	IC CXA1846BN-T4
IC704	8-759-533-85	s	IC L88M05T-FA-TL
L201	1-469-525-91	s	INDUCTOR 10UH (NLFV25)
L301	1-469-525-91	s	INDUCTOR 10UH (NLFV25)
L302	1-469-525-91	s	INDUCTOR 10UH (NLFV25)
L303	1-469-525-91	s	INDUCTOR 10UH (NLFV25)
L304	1-469-525-91	s	INDUCTOR 10UH (NLFV25)
L305	1-469-525-91	s	INDUCTOR 10UH (NLFV25)
L401	1-410-369-11	s	INDUCTOR,CHIP 1UH (3225)
L402	1-410-369-11	s	INDUCTOR,CHIP 1UH (3225)
L501	1-410-369-11	s	INDUCTOR,CHIP 1UH (3225)
L502	1-410-369-11	s	INDUCTOR,CHIP 1UH (3225)

(C BOARD ;for VPL-CX4)

Ref. No. or Q'ty	Part No.	SP	Description
L601	1-410-369-11	s	INDUCTOR,CHIP 1UH (3225)
L602	1-410-369-11	s	INDUCTOR,CHIP 1UH (3225)
L701	1-412-028-11	s	INDUCTOR,CHIP 4.7UH (3225)
L702	1-412-028-11	s	INDUCTOR,CHIP 4.7UH (3225)
Q101	8-729-028-91	s	TRANSISTOR DTA144EUA-T106
Q201	8-729-230-49	s	TRANSISTOR 2SC2712-YG
Q202	8-729-026-49	s	TRANSISTOR 2SA1037AK-T146-R
Q203	8-729-202-38	s	TRANSISTOR 2SC3326N-A
Q204	8-729-202-38	s	TRANSISTOR 2SC3326N-A
Q301	8-729-112-65	s	TRANSISTOR 2SA1462
Q302	8-729-112-65	s	TRANSISTOR 2SA1462
Q303	8-729-112-65	s	TRANSISTOR 2SA1462
Q304	8-729-112-65	s	TRANSISTOR 2SA1462
Q401	8-729-013-28	s	TRANSISTOR HN1B01FU-TE85R
Q402	8-729-013-28	s	TRANSISTOR HN1B01FU-TE85R
Q501	8-729-013-28	s	TRANSISTOR HN1B01FU-TE85R
Q502	8-729-013-28	s	TRANSISTOR HN1B01FU-TE85R
Q601	8-729-013-28	s	TRANSISTOR HN1B01FU-TE85R
Q602	8-729-013-28	s	TRANSISTOR HN1B01FU-TE85R
Q701	8-729-907-00	s	TRANSISTOR DTC114EU
Q702	8-729-907-00	s	TRANSISTOR DTC114EU
Q703	8-729-013-28	s	TRANSISTOR HN1B01FU-TE85R
R101	1-216-864-11	s	CONDUCTOR, CHIP (1608)
R102	1-216-833-11	s	RESISTOR,CHIP 10K 1/16W (1608)
R103	1-218-723-11	s	RESISTOR,CHIP 20K 1/16W(1608)
R104	1-218-714-11	s	RESISTOR,CHIP 8.2K 1/16W(1608)
R105	1-216-829-11	s	RESISTOR,CHIP 4.7K 1/16W(1608)
R106	1-218-685-11	s	RESISTOR,CHIP 510 1/16W
R107	1-218-692-11	s	RESISTOR,CHIP 1.0K 1/16W(1608)
R108	1-216-833-11	s	RESISTOR,CHIP 10K 1/16W (1608)
R110	1-216-809-11	s	RESISTOR,CHIP 100 1/16W 1608
R111	1-218-692-11	s	RESISTOR,CHIP 1.0K 1/16W(1608)
R112	1-216-809-11	s	RESISTOR,CHIP 100 1/16W 1608
R113	1-216-809-11	s	RESISTOR,CHIP 100 1/16W 1608
R118	1-216-809-11	s	RESISTOR,CHIP 100 1/16W 1608
R119	1-216-809-11	s	RESISTOR,CHIP 100 1/16W 1608
R120	1-216-805-11	s	RESISTOR,CHIP 47 1/16W 1608
R121	1-216-805-11	s	RESISTOR,CHIP 47 1/16W 1608
R123	1-216-805-11	s	RESISTOR,CHIP 47 1/16W 1608
R125	1-216-805-11	s	RESISTOR,CHIP 47 1/16W 1608
R127	1-216-815-11	s	RESISTOR,CHIP 330 1/16W 1608
R128	1-216-815-11	s	RESISTOR,CHIP 330 1/16W 1608
R129	1-216-815-11	s	RESISTOR,CHIP 330 1/16W 1608
R130	1-216-815-11	s	RESISTOR,CHIP 330 1/16W 1608
R131	1-216-821-11	s	RESISTOR,CHIP 1.0K 1/16W(1608)
R132	1-216-815-11	s	RESISTOR,CHIP 330 1/16W 1608
R134	1-216-864-11	s	CONDUCTOR, CHIP (1608)
R135	1-216-864-11	s	CONDUCTOR, CHIP (1608)
R201	1-216-839-11	s	RESISTOR,CHIP 33K 1/16W 1608
R202	1-216-833-11	s	RESISTOR,CHIP 10K 1/16W (1608)
R203	1-216-809-11	s	RESISTOR,CHIP 100 1/16W 1608
R204	1-216-809-11	s	RESISTOR,CHIP 100 1/16W 1608
R205	1-216-809-11	s	RESISTOR,CHIP 100 1/16W 1608
R206	1-216-809-11	s	RESISTOR,CHIP 100 1/16W 1608
R207	1-216-809-11	s	RESISTOR,CHIP 100 1/16W 1608
R208	1-216-809-11	s	RESISTOR,CHIP 100 1/16W 1608
R209	1-216-841-11	s	RESISTOR, CHIP 47K 1/16W 1608
R210	1-216-821-11	s	RESISTOR,CHIP 1.0K 1/16W(1608)

(C BOARD ;for VPL-CX4)

Ref. No. or Q'ty	Part No.	SP	Description
R211	1-216-833-11	s	RESISTOR,CHIP 10K 1/16W (1608)
R212	1-216-828-11	s	RESISTOR, CHIP 3.9K 1/16W 1608
R213	1-216-828-11	s	RESISTOR, CHIP 3.9K 1/16W 1608
R214	1-216-805-11	s	RESISTOR,CHIP 47 1/16W 1608
R215	1-216-805-11	s	RESISTOR,CHIP 47 1/16W 1608
R216	1-216-805-11	s	RESISTOR,CHIP 47 1/16W 1608
R217	1-216-805-11	s	RESISTOR,CHIP 47 1/16W 1608
R218	1-216-805-11	s	RESISTOR,CHIP 47 1/16W 1608
R219	1-216-805-11	s	RESISTOR,CHIP 47 1/16W 1608
R220	1-216-829-11	s	RESISTOR,CHIP 4.7K 1/16W(1608)
R221	1-216-829-11	s	RESISTOR,CHIP 4.7K 1/16W(1608)
R222	1-216-825-11	s	RESISTOR,CHIP 2.2K 1/16W 1608
R223	1-216-825-11	s	RESISTOR,CHIP 2.2K 1/16W 1608
R224	1-216-805-11	s	RESISTOR,CHIP 47 1/16W 1608
R225	1-216-805-11	s	RESISTOR,CHIP 47 1/16W 1608
R226	1-216-841-11	s	RESISTOR, CHIP 47K 1/16W 1608
R227	1-216-841-11	s	RESISTOR, CHIP 47K 1/16W 1608
R228	1-216-817-11	s	RESISTOR,CHIP 470 1/16W 1608
R229	1-216-805-11	s	RESISTOR,CHIP 47 1/16W 1608
R230	1-216-814-11	s	RESISTOR,CHIP 270 1/16W 1608
R231	1-216-864-11	s	CONDUCTOR, CHIP (1608)
R233	1-216-864-11	s	CONDUCTOR, CHIP (1608)
R234	1-216-864-11	s	CONDUCTOR, CHIP (1608)
R235	1-216-833-11	s	RESISTOR,CHIP 10K 1/16W (1608)
R236	1-216-833-11	s	RESISTOR,CHIP 10K 1/16W (1608)
R238	1-216-864-11	s	CONDUCTOR, CHIP (1608)
R239	1-216-864-11	s	CONDUCTOR, CHIP (1608)
R241	1-216-864-11	s	CONDUCTOR, CHIP (1608)
R301	1-216-809-11	s	RESISTOR,CHIP 100 1/16W 1608
R302	1-216-809-11	s	RESISTOR,CHIP 100 1/16W 1608
R303	1-216-816-11	s	RESISTOR, CHIP 390 1/16W 1608
R304	1-216-809-11	s	RESISTOR,CHIP 100 1/16W 1608
R305	1-216-808-11	s	RESISTOR,CHIP 82 1/16W 1608
R306	1-216-841-11	s	RESISTOR, CHIP 47K 1/16W 1608
R307	1-216-819-11	s	RESISTOR,CHIP 680 1/16W 1608
R309	1-218-665-11	s	RESISTOR,CHIP 75 1/16W (1608)
R310	1-216-057-00	s	RESISTOR CHIP 2.2K 1/10W(2012)
R311	1-216-057-00	s	RESISTOR CHIP 2.2K 1/10W(2012)
R312	1-216-797-11	s	RESISTOR,CHIP 10 1/16W 1608
R313	1-216-833-11	s	RESISTOR,CHIP 10K 1/16W (1608)
R314	1-216-816-11	s	RESISTOR, CHIP 390 1/16W 1608
R315	1-216-853-11	s	RESISTOR,CHIP 470K 1/16W(1608)
R317	1-216-808-11	s	RESISTOR,CHIP 82 1/16W 1608
R318	1-216-797-11	s	RESISTOR,CHIP 10 1/16W 1608
R319	1-218-665-11	s	RESISTOR,CHIP 75 1/16W (1608)
R320	1-216-819-11	s	RESISTOR,CHIP 680 1/16W 1608
R322	1-216-057-00	s	RESISTOR CHIP 2.2K 1/10W(2012)
R323	1-216-057-00	s	RESISTOR CHIP 2.2K 1/10W(2012)
R324	1-216-797-11	s	RESISTOR,CHIP 10 1/16W 1608
R325	1-216-816-11	s	RESISTOR, CHIP 390 1/16W 1608
R326	1-218-665-11	s	RESISTOR,CHIP 75 1/16W (1608)
R327	1-216-819-11	s	RESISTOR,CHIP 680 1/16W 1608
R328	1-216-808-11	s	RESISTOR,CHIP 82 1/16W 1608
R329	1-216-057-00	s	RESISTOR CHIP 2.2K 1/10W(2012)
R330	1-216-057-00	s	RESISTOR CHIP 2.2K 1/10W(2012)
R331	1-218-688-11	s	RESISTOR,CHIP 680 1/16W(1608)
R332	1-216-809-11	s	RESISTOR,CHIP 100 1/16W 1608
R333	1-216-827-11	s	RESISTOR, CHIP 3.3K 1/16W 1608
R334	1-216-809-11	s	RESISTOR,CHIP 100 1/16W 1608

(C BOARD ;for VPL-CX4)

Ref. No. or Q'ty	Part No.	SP	Description
R335	1-216-809-11	s	RESISTOR,CHIP 100 1/16W 1608
R336	1-218-710-11	s	RESISTOR,CHIP 5.6K 1/16W(1608)
R337	1-218-716-11	s	RESISTOR,CHIP 10K 1/16W(1608)
R338	1-216-805-11	s	RESISTOR,CHIP 47 1/16W 1608
R339	1-216-805-11	s	RESISTOR,CHIP 47 1/16W 1608
R340	1-216-805-11	s	RESISTOR,CHIP 47 1/16W 1608
R341	1-216-805-11	s	RESISTOR,CHIP 47 1/16W 1608
R342	1-216-805-11	s	RESISTOR,CHIP 47 1/16W 1608
R404	1-218-699-11	s	RESISTOR,CHIP 2.0K 1/16W(1608)
R405	1-216-805-11	s	RESISTOR,CHIP 47 1/16W 1608
R406	1-218-706-11	s	RESISTOR,CHIP 3.9K 1/16W(1608)
R407	1-216-864-11	s	CONDUCTOR, CHIP (1608)
R411	1-216-809-11	s	RESISTOR,CHIP 100 1/16W 1608
R412	1-216-809-11	s	RESISTOR,CHIP 100 1/16W 1608
R413	1-216-864-11	s	CONDUCTOR, CHIP (1608)
R414	1-216-864-11	s	CONDUCTOR, CHIP (1608)
R415	1-216-864-11	s	CONDUCTOR, CHIP (1608)
R416	1-216-864-11	s	CONDUCTOR, CHIP (1608)
R417	1-216-864-11	s	CONDUCTOR, CHIP (1608)
R418	1-216-864-11	s	CONDUCTOR, CHIP (1608)
R419	1-216-864-11	s	CONDUCTOR, CHIP (1608)
R420	1-216-864-11	s	CONDUCTOR, CHIP (1608)
R421	1-216-864-11	s	CONDUCTOR, CHIP (1608)
R422	1-216-864-11	s	CONDUCTOR, CHIP (1608)
R423	1-216-864-11	s	CONDUCTOR, CHIP (1608)
R424	1-216-864-11	s	CONDUCTOR, CHIP (1608)
R425	1-216-809-11	s	RESISTOR,CHIP 100 1/16W 1608
R426	1-216-825-11	s	RESISTOR,CHIP 2.2K 1/16W 1608
R427	1-216-825-11	s	RESISTOR,CHIP 2.2K 1/16W 1608
R428	1-218-720-11	s	RESISTOR,CHIP 15K 1/16W(1608)
R429	1-216-789-11	s	RESISTOR,CHIP 2.2 1/16W(1608)
R430	1-216-789-11	s	RESISTOR,CHIP 2.2 1/16W(1608)
R431	1-216-864-11	s	CONDUCTOR, CHIP (1608)
R432	1-218-744-11	s	RESISTOR,CHIP 150K 1/16W
R433	1-216-833-11	s	RESISTOR,CHIP 10K 1/16W (1608)
R434	1-216-833-11	s	RESISTOR,CHIP 10K 1/16W (1608)
R435	1-216-833-11	s	RESISTOR,CHIP 10K 1/16W (1608)
R436	1-218-699-11	s	RESISTOR,CHIP 2.0K 1/16W(1608)
R437	1-218-706-11	s	RESISTOR,CHIP 3.9K 1/16W(1608)
R438	1-216-864-11	s	CONDUCTOR, CHIP (1608)
R504	1-216-805-11	s	RESISTOR,CHIP 47 1/16W 1608
R505	1-218-699-11	s	RESISTOR,CHIP 2.0K 1/16W(1608)
R506	1-218-706-11	s	RESISTOR,CHIP 3.9K 1/16W(1608)
R507	1-216-864-11	s	CONDUCTOR, CHIP (1608)
R511	1-216-809-11	s	RESISTOR,CHIP 100 1/16W 1608
R512	1-216-809-11	s	RESISTOR,CHIP 100 1/16W 1608
R513	1-216-864-11	s	CONDUCTOR, CHIP (1608)
R514	1-216-864-11	s	CONDUCTOR, CHIP (1608)
R515	1-216-864-11	s	CONDUCTOR, CHIP (1608)
R516	1-216-864-11	s	CONDUCTOR, CHIP (1608)
R517	1-216-864-11	s	CONDUCTOR, CHIP (1608)
R518	1-216-864-11	s	CONDUCTOR, CHIP (1608)
R519	1-216-864-11	s	CONDUCTOR, CHIP (1608)
R520	1-216-864-11	s	CONDUCTOR, CHIP (1608)
R521	1-216-864-11	s	CONDUCTOR, CHIP (1608)
R522	1-216-864-11	s	CONDUCTOR, CHIP (1608)
R523	1-216-864-11	s	CONDUCTOR, CHIP (1608)
R524	1-216-864-11	s	CONDUCTOR, CHIP (1608)
R525	1-216-809-11	s	RESISTOR,CHIP 100 1/16W 1608

(C BOARD ;for VPL-CX4)

Ref. No. or Q'ty	Part No.	SP	Description
R526	1-216-825-11	s	RESISTOR,CHIP 2.2K 1/16W 1608
R527	1-216-825-11	s	RESISTOR,CHIP 2.2K 1/16W 1608
R528	1-216-789-11	s	RESISTOR,CHIP 2.2 1/16W(1608)
R529	1-216-789-11	s	RESISTOR,CHIP 2.2 1/16W(1608)
R530	1-216-864-11	s	CONDUCTOR, CHIP (1608)
R531	1-216-833-11	s	RESISTOR,CHIP 10K 1/16W (1608)
R532	1-216-833-11	s	RESISTOR,CHIP 10K 1/16W (1608)
R533	1-216-833-11	s	RESISTOR,CHIP 10K 1/16W (1608)
R534	1-218-699-11	s	RESISTOR,CHIP 2.0K 1/16W(1608)
R535	1-218-706-11	s	RESISTOR,CHIP 3.9K 1/16W(1608)
R536	1-216-864-11	s	CONDUCTOR, CHIP (1608)
R604	1-218-699-11	s	RESISTOR,CHIP 2.0K 1/16W(1608)
R605	1-216-805-11	s	RESISTOR,CHIP 47 1/16W 1608
R606	1-218-706-11	s	RESISTOR,CHIP 3.9K 1/16W(1608)
R607	1-216-864-11	s	CONDUCTOR, CHIP (1608)
R611	1-216-809-11	s	RESISTOR,CHIP 100 1/16W 1608
R612	1-216-809-11	s	RESISTOR,CHIP 100 1/16W 1608
R613	1-216-864-11	s	CONDUCTOR, CHIP (1608)
R614	1-216-864-11	s	CONDUCTOR, CHIP (1608)
R615	1-216-864-11	s	CONDUCTOR, CHIP (1608)
R616	1-216-864-11	s	CONDUCTOR, CHIP (1608)
R617	1-216-864-11	s	CONDUCTOR, CHIP (1608)
R618	1-216-864-11	s	CONDUCTOR, CHIP (1608)
R619	1-216-864-11	s	CONDUCTOR, CHIP (1608)
R620	1-216-864-11	s	CONDUCTOR, CHIP (1608)
R621	1-216-864-11	s	CONDUCTOR, CHIP (1608)
R622	1-216-864-11	s	CONDUCTOR, CHIP (1608)
R623	1-216-864-11	s	CONDUCTOR, CHIP (1608)
R624	1-216-864-11	s	CONDUCTOR, CHIP (1608)
R625	1-216-809-11	s	RESISTOR,CHIP 100 1/16W 1608
R626	1-216-825-11	s	RESISTOR,CHIP 2.2K 1/16W 1608
R627	1-216-825-11	s	RESISTOR,CHIP 2.2K 1/16W 1608
R628	1-216-789-11	s	RESISTOR,CHIP 2.2 1/16W(1608)
R629	1-216-789-11	s	RESISTOR,CHIP 2.2 1/16W(1608)
R630	1-216-864-11	s	CONDUCTOR, CHIP (1608)
R631	1-216-833-11	s	RESISTOR,CHIP 10K 1/16W (1608)
R632	1-216-833-11	s	RESISTOR,CHIP 10K 1/16W (1608)
R633	1-216-833-11	s	RESISTOR,CHIP 10K 1/16W (1608)
R634	1-218-699-11	s	RESISTOR,CHIP 2.0K 1/16W(1608)
R635	1-218-706-11	s	RESISTOR,CHIP 3.9K 1/16W(1608)
R636	1-216-864-11	s	CONDUCTOR, CHIP (1608)
R701	1-216-833-11	s	RESISTOR,CHIP 10K 1/16W (1608)
R702	1-217-671-11	s	RESISTOR CHIP 1 1/10W(2125)
R703	1-216-841-11	s	RESISTOR, CHIP 47K 1/16W 1608
R704	1-216-824-11	s	RESISTOR, CHIP 1.8K 1/16W 1608
R705	1-216-841-11	s	RESISTOR, CHIP 47K 1/16W 1608
R706	1-216-814-11	s	RESISTOR,CHIP 270 1/16W 1608
R707	1-216-864-11	s	CONDUCTOR, CHIP (1608)
R709	1-216-864-11	s	CONDUCTOR, CHIP (1608)
R710	1-216-833-11	s	RESISTOR,CHIP 10K 1/16W (1608)
R711	1-216-841-11	s	RESISTOR, CHIP 47K 1/16W 1608
R712	1-217-671-11	s	RESISTOR CHIP 1 1/10W(2125)
R713	1-216-841-11	s	RESISTOR, CHIP 47K 1/16W 1608
R714	1-216-824-11	s	RESISTOR, CHIP 1.8K 1/16W 1608
R715	1-216-829-11	s	RESISTOR,CHIP 4.7K 1/16W(1608)
R716	1-216-864-11	s	CONDUCTOR, CHIP (1608)
R718	1-216-864-11	s	CONDUCTOR, CHIP (1608)
R719	1-216-809-11	s	RESISTOR,CHIP 100 1/16W 1608
R720	1-216-809-11	s	RESISTOR,CHIP 100 1/16W 1608

(C BOARD ;for VPL-CX4)

Ref. No. or Q'ty	Part No.	SP	Description
R721	1-216-809-11	s	RESISTOR,CHIP 100 1/16W 1608
R722	1-216-823-11	s	RESISTOR, CHIP 1.5K 1/16W
R723	1-216-827-11	s	RESISTOR, CHIP 3.3K 1/16W 1608
R724	1-216-845-11	s	RESISTOR,CHIP 100K 1/16W(1608)
R725	1-216-833-11	s	RESISTOR,CHIP 10K 1/16W (1608)
R726	1-216-829-11	s	RESISTOR,CHIP 4.7K 1/16W(1608)
R727	1-216-829-11	s	RESISTOR,CHIP 4.7K 1/16W(1608)
R728	1-216-829-11	s	RESISTOR,CHIP 4.7K 1/16W(1608)
R729	1-216-814-11	s	RESISTOR,CHIP 270 1/16W 1608
RB101	1-233-576-11	s	RESISTOR,CHIP NETWORK 100
RB102	1-233-576-11	s	RESISTOR,CHIP NETWORK 100
RB103	1-233-576-11	s	RESISTOR,CHIP NETWORK 100
RB104	1-233-576-11	s	RESISTOR,CHIP NETWORK 100
RB201	1-233-576-11	s	RESISTOR,CHIP NETWORK 100
RB202	1-233-576-11	s	RESISTOR,CHIP NETWORK 100
RB203	1-233-576-11	s	RESISTOR,CHIP NETWORK 100
RB204	1-233-576-11	s	RESISTOR,CHIP NETWORK 100
RB205	1-233-576-11	s	RESISTOR,CHIP NETWORK 100
RB206	1-233-576-11	s	RESISTOR,CHIP NETWORK 100
RB207	1-233-575-11	s	RES, CHIP NETWORK 22
RB208	1-233-575-11	s	RES, CHIP NETWORK 22
RB209	1-233-388-11	s	FILTER, BAND PASS
RB210	1-233-388-11	s	FILTER, BAND PASS
RB211	1-233-575-11	s	RES, CHIP NETWORK 22
RB212	1-233-575-11	s	RES, CHIP NETWORK 22
RB301	1-233-576-11	s	RESISTOR,CHIP NETWORK 100
RB302	1-233-576-11	s	RESISTOR,CHIP NETWORK 100
RB303	1-233-576-11	s	RESISTOR,CHIP NETWORK 100
S201	1-771-337-21	s	SWITCH, SLIDE
TH101	1-808-656-11	s	THERMISTOR
TP103	1-535-757-11	s	CHIP, CHECKER (CONNECTOR)
TP104	1-535-757-11	s	CHIP, CHECKER (CONNECTOR)
TP108	1-535-757-11	s	CHIP, CHECKER (CONNECTOR)
TP109	1-535-757-11	s	CHIP, CHECKER (CONNECTOR)
TP110	1-535-757-11	s	CHIP, CHECKER (CONNECTOR)
TP111	1-535-757-11	s	CHIP, CHECKER (CONNECTOR)
TP112	1-535-757-11	s	CHIP, CHECKER (CONNECTOR)
TP113	1-535-757-11	s	CHIP, CHECKER (CONNECTOR)
TP115	1-535-757-11	s	CHIP, CHECKER (CONNECTOR)
TP116	1-535-757-11	s	CHIP, CHECKER (CONNECTOR)
TP117	1-535-757-11	s	CHIP, CHECKER (CONNECTOR)
TP201	1-535-757-11	s	CHIP, CHECKER (CONNECTOR)
TP202	1-535-757-11	s	CHIP, CHECKER (CONNECTOR)
TP203	1-535-757-11	s	CHIP, CHECKER (CONNECTOR)
TP204	1-535-757-11	s	CHIP, CHECKER (CONNECTOR)
TP205	1-535-757-11	s	CHIP, CHECKER (CONNECTOR)
TP206	1-535-757-11	s	CHIP, CHECKER (CONNECTOR)
TP207	1-535-757-11	s	CHIP, CHECKER (CONNECTOR)
TP208	1-535-757-11	s	CHIP, CHECKER (CONNECTOR)
TP209	1-535-757-11	s	CHIP, CHECKER (CONNECTOR)
TP210	1-535-757-11	s	CHIP, CHECKER (CONNECTOR)
TP211	1-535-757-11	s	CHIP, CHECKER (CONNECTOR)
TP212	1-535-757-11	s	CHIP, CHECKER (CONNECTOR)
TP213	1-535-757-11	s	CHIP, CHECKER (CONNECTOR)
TP301	1-535-757-11	s	CHIP, CHECKER (CONNECTOR)
TP302	1-535-757-11	s	CHIP, CHECKER (CONNECTOR)
TP303	1-535-757-11	s	CHIP, CHECKER (CONNECTOR)

(C BOARD ;for VPL-CX4)

Ref. No. or Q'ty	Part No.	SP	Description
TP304	1-535-757-11	s	CHIP, CHECKER (CONNECTOR)
TP401	1-535-757-11	s	CHIP, CHECKER (CONNECTOR)
TP402	1-535-757-11	s	CHIP, CHECKER (CONNECTOR)
TP403	1-535-757-11	s	CHIP, CHECKER (CONNECTOR)
TP405	1-535-757-11	s	CHIP, CHECKER (CONNECTOR)
TP406	1-535-757-11	s	CHIP, CHECKER (CONNECTOR)
TP501	1-535-757-11	s	CHIP, CHECKER (CONNECTOR)
TP502	1-535-757-11	s	CHIP, CHECKER (CONNECTOR)
TP504	1-535-757-11	s	CHIP, CHECKER (CONNECTOR)
TP505	1-535-757-11	s	CHIP, CHECKER (CONNECTOR)
TP601	1-535-757-11	s	CHIP, CHECKER (CONNECTOR)
TP602	1-535-757-11	s	CHIP, CHECKER (CONNECTOR)
TP604	1-535-757-11	s	CHIP, CHECKER (CONNECTOR)
TP605	1-535-757-11	s	CHIP, CHECKER (CONNECTOR)
TP701	1-535-757-11	s	CHIP, CHECKER (CONNECTOR)
TP702	1-535-757-11	s	CHIP, CHECKER (CONNECTOR)

F BOARD
---

*a:[Serial No. 10001 - 5000000 ;for VPL-CS4]
*b:[Serial No. 10001 - 12050 ;for VPL-CX4]
*c:[Serial No. 12051 - 5000000 ;for VPL-CX4]
*d:[Serial No. 5000001 - ;for VPL-CS4/CX4]

Ref. No. or Q'ty		Part No.	SP	Description
1pc	*a	A-1245-603-A	s	MOUNTED CIRCUIT BOARD, F
1pc	*b	A-1245-603-A	s	MOUNTED CIRCUIT BOARD, F
1pc	*d	A-1245-604-A	s	MOUNTED CIRCUIT BOARD, F
1pc	*c	A-1300-308-A	s	MOUNTED CIRCUIT BOARD, F
1pc		1-900-258-70	o	CONNECTOR ASSY A, VH 3P
1pc		1-900-258-78	o	CONNECTOR ASSY (4DIA), LUG
C1101	⚠	1-113-895-11	s	CAPACITOR,CERAMIC 150PF B/250V
C1103	⚠	1-125-933-51	s	CAP, METALIZED FILM 1.0MFMF
C1104	⚠	1-117-916-51	s	CAP, METALIZED FILM 0.22MF
C1105	⚠	1-117-916-51	s	CAP, METALIZED FILM 0.22MF
C1106	⚠	1-113-895-11	s	CAPACITOR,CERAMIC 150PF B/250V
CN1101		1-793-305-11	s	INLET, AC (AC-M11PB52)
F1101	⚠	1-576-233-11	s	FUSE (H.B.C.) 6.3A/250V
FH1101	⚠	1-533-223-11	s	CLIP,FUSE
FH1102	⚠	1-533-223-11	s	CLIP,FUSE
L1101	⚠	1-424-821-11	s	COIL, CHOKE 80UH
L1102	⚠	1-424-822-11	s	COIL, LINE FILTER
R1101	⚠	1-202-847-00	s	RESISTOR,SOLID 560K 1/2W
VD1101	⚠	1-801-268-11	s	VARISTOR (TNR14V471K660)

GA BOARD
---

*a:[Serial No. 10001 - 5000000 ;for VPL-CS4]
*b:[Serial No. 10001 - 12050 ;for VPL-CX4]
*c:[Serial No. 12051 - 5000000 ;for VPL-CX4]
*d:[Serial No. 5000001 - ;for VPL-CS4/CX4]

Ref. No. or Q'ty		Part No.	SP	Description
1pc	*c	A-1300-309-A	s	MOUNTED CIRCUIT BOARD, GA
1pc	*a	A-1316-567-A	s	MOUNTED CIRCUIT BOARD, GA
1pc	*b	A-1316-567-A	s	MOUNTED CIRCUIT BOARD, GA
1pc	*d	A-1316-575-A	s	MOUNTED CIRCUIT BOARD, GA
1pc		1-900-258-71	o	CONNECTOR ASSY B, VH 3P
1pc		1-900-258-72	o	CONNECTOR ASSY C, VH 3P
1pc		7-682-649-09	s	SCREW +PS 3X10
C2101		1-117-227-11	s	CAPACITOR,PE FILM 1.0MF/450V
C2102		1-135-449-11	s	CAPCITOR ELECT 220MF/450V
C2103		1-137-477-11	s	CAPCITOR,FILM 0.47MF/400V
C2104		1-107-909-11	s	CAPACITOR,ELECT 47MF/50V
C2105		1-115-339-11	s	CAPACITOR,CERAMIC 0.1MF/50V
C2106		1-115-340-11	s	CAPACITOR CERAMIC 0.22MF/25V B
C2107		1-163-251-11	s	CAPACITOR CERAMIC 100PF/50V
CN2102		1-691-960-11	o	PIN,CONNECTOR (PC BOARD) 3P
CN2104		1-564-719-11	o	PIN,CONNECTOR (3P)
D2101		8-719-304-63	s	DIODE RM11C (RECTI)
D2102	⚠	8-719-066-75	s	DIODE D6SB80
D2103		8-719-055-30	s	DIODE D1FS4A-TA
D2104		8-719-055-30	s	DIODE D1FS4A-TA
D2105		8-719-106-98	s	DIODE RD16M-B2
IC2101		8-749-015-27	s	IC MZ1540
L2101		1-424-820-11	s	COIL, CHOKE
L2102		1-416-945-11	s	COIL, CHOKE (SMD)
L2103		1-416-945-11	s	COIL, CHOKE (SMD)
L2104		1-416-945-11	s	COIL, CHOKE (SMD)
L2105		1-416-945-11	s	COIL, CHOKE (SMD)
L2106		1-416-945-11	s	COIL, CHOKE (SMD)
L2107		1-416-945-11	s	COIL, CHOKE (SMD)
L2108		1-416-945-11	s	COIL, CHOKE (SMD)
L2109		1-416-945-11	s	COIL, CHOKE (SMD)
Q2101		8-729-230-27	s	TRANSISTOR 2SA1213Y-TE12L
Q3601		8-729-230-27	s	TRANSISTOR 2SA1213Y-TE12L
R2101	⚠	1-217-786-11	s	RESISTOR, CEMENT 22/5W (FUSE)
R2102		1-216-073-00	s	RESISTOR,CHIP 10K 1/10W(2012)
R2103		1-217-156-00	s	RESISTOR METAL 0.22/5W
R2104		1-220-269-11	s	RESISTOR, CHIP 330 1/2W (4532)
R2105		1-220-269-11	s	RESISTOR, CHIP 330 1/2W (4532)
R2106		1-216-063-91	s	RESISTOR,CHIP 3.9K 1/10W(2125)
R2107		1-216-065-91	s	RESISTOR,CHIP 4.7K 1/10W(2012)
R3606		1-249-389-11	s	RES,CARBON 4.7 1/4W
R3608		1-216-057-00	s	RESISTOR CHIP 2.2K 1/10W(2012)
R3609		1-216-073-00	s	RESISTOR,CHIP 10K 1/10W(2012)
RY2101	⚠	1-755-275-11	s	RELAY, AC POWER (12V)

GB BOARD
---

*a:[Serial No. 10001 - 5000000 ;for VPL-CS4]
*b:[Serial No. 10001 - 12050 ;for VPL-CX4]
*c:[Serial No. 12051 - 5000000 ;for VPL-CX4]
*d:[Serial No. 5000001 - ;for VPL-CS4/CX4]

Ref. No. or Q'ty	Part No.	SP	Description
1pc	*c A-1300-310-A	s	MOUNTED CIRCUIT BOARD, GB
1pc	*a A-1316-568-A	s	MOUNTED CIRCUIT BOARD, GB
1pc	*b A-1316-568-A	s	MOUNTED CIRCUIT BOARD, GB
1pc	*d A-1316-576-A	s	MOUNTED CIRCUIT BOARD, GB
1pc	4-083-244-01	s	SHEET (GB)
C3107	1-163-021-91	s	CAPACITOR, CERAMIC 0.01MF/50V
C3108	1-136-479-11	s	CAPACITOR FILM 0.001MF/100V PP
C3109	1-163-021-91	s	CAPACITOR, CERAMIC 0.01MF/50V
C3110	1-124-779-00	s	CAPACITOR,ELECT 10MF/16V
C3111	1-109-994-11	s	CAPACITOR,CHIP CERAMIC 2.2MF B
C3112	1-126-967-11	s	CAPACITOR,ELECT 47MF/50V
C3113	1-130-495-00	s	CAPACITOR FILM 0.1MF/50V PETP
C3114	1-124-779-00	s	CAPACITOR,ELECT 10MF/16V
C3119	1-137-753-11	s	CAPACITOR METALIZED 4700PF
C3120	1-115-566-11	s	CAPACITOR,CERAMIC 4.7MF B/6.3V
C3121	1-107-911-11	s	CAPACITOR,ELECT 220MF/50V
C3122	1-115-339-11	s	CAPACITOR,CERAMIC 0.1MF/50V
C3123	1-111-066-11	s	CAPACITOR,ELECT 820MF/25V 105
C3125	1-128-946-11	s	CAP, ELECT 2200MF / 10V
C3126	1-115-339-11	s	CAPACITOR,CERAMIC 0.1MF/50V
C3128	1-109-994-11	s	CAPACITOR,CHIP CERAMIC 2.2MF B
C3130	1-113-900-11	s	CAPACITOR,CERAMIC 470PF/250V
C3131	1-115-339-11	s	CAPACITOR,CERAMIC 0.1MF/50V
C3201	1-128-527-11	s	CAPACITOR,ELECT 330MF/25V
C3202	1-104-652-11	s	CAPACITOR,ELECT 470MF/10V(105)
C3203	1-126-205-11	s	CAPACITOR,ELECT 47M/6.3
C3204	1-115-339-11	s	CAPACITOR,CERAMIC 0.1MF/50V
C3205	1-163-009-11	s	CAPACITOR,CERAMIC 1000PF/50V
C3206	1-163-021-91	s	CAPACITOR, CERAMIC 0.01MF/50V
C3207	1-115-339-11	s	CAPACITOR,CERAMIC 0.1MF/50V
C3208	1-163-021-91	s	CAPACITOR, CERAMIC 0.01MF/50V
C3209	1-128-391-11	s	CAPACITOR,ELECT 330MF/6.3V
C3211	1-127-738-11	s	CAPACITOR, CERAMIC 4.7MF/25V
C3212	1-127-738-11	s	CAPACITOR, CERAMIC 4.7MF/25V
C3314	1-117-370-11	s	CAPASITER CERAMIC 10MF (3216)
C3315	1-126-205-11	s	CAPACITOR,ELECT 47M/6.3
C3316	1-115-339-11	s	CAPACITOR,CERAMIC 0.1MF/50V
C3318	1-115-339-11	s	CAPACITOR,CERAMIC 0.1MF/50V
C3327	1-115-339-11	s	CAPACITOR,CERAMIC 0.1MF/50V
C3328	1-126-205-11	s	CAPACITOR,ELECT 47M/6.3
C3330	1-107-823-11	s	CAPACITOR,CERAMIC 0.47MF/16V
CN3201	1-564-705-11	o	PIN,CONNECTOR (3P)
CN3202	1-691-960-11	o	PIN,CONNECTOR (PC BOARD) 3P
CN3304	1-785-305-21	o	CONNECTOR, BOARD TO BOARD
D3103	8-719-107-13	s	DIODE RD18M-B1
D3104	8-719-055-30	s	DIODE D1FS4A-TA
D3107	8-719-979-64	s	DIODE UF4005PKG23
D3108	8-719-118-12	s	DIODE RD33M-B
D3109	8-719-073-52	s	DIODE D2FS6-TA
D3110	8-719-075-63	s	DIODE DF10SC6
D3112	8-719-075-63	s	DIODE DF10SC6
D3113	8-719-106-16	s	DIODE RD6.8M-B1
D3116	8-719-073-01	s	DIODE MA111-(K8).SU
D3118	8-719-073-01	s	DIODE MA111-(K8).SO

Ref. No. or Q'ty	Part No.	SP	Description
D3119	8-719-073-01	s	DIODE MA111-(K8).SO
D3121	8-719-073-01	s	DIODE MA111-(K8).SO
D3201	8-719-080-75	s	DIODE M1FL20U-4063
D3306	8-719-073-01	s	DIODE MA111-(K8).SO
IC3100	8-759-670-30	s	IC MCZ3001D
IC3102	8-759-388-23	s	IC TL431BCDR2
IC3303	8-759-533-85	s	IC L88M05T-FA-TL
IC3304	8-759-533-85	s	IC L88M05T-FA-TL
IC3306	8-759-066-55	s	IC TA75W393FU
IC3307	8-759-066-55	s	IC TA75W393FU
IC3711	8-759-831-63	s	IC MD1320N-TA
L3201	1-416-606-11	s	COIL, CHOKE (SMD)
L3202	1-416-606-11	s	COIL, CHOKE (SMD)
L3203	1-416-758-11	s	COIL, CHOKE 22UH
PH3100	8-749-010-64	s	PHOTO COUPLER PC123F2
PH3101	8-749-010-64	s	PHOTO COUPLER PC123F2
PH3102	8-749-010-64	s	PHOTO COUPLER PC123F2
Q3102	8-729-049-51	s	TRANSISTOR 2SK2876-01MR-F119
Q3103	8-729-049-51	s	TRANSISTOR 2SK2876-01MR-F119
Q3104	8-729-013-28	s	TRANSISTOR HN1B01FU-TE85R
Q3106	8-729-230-49	s	TRANSISTOR 2SC2712-YG
Q3107	8-729-048-69	s	TRANSISTOR 2SJ530S-TL
Q3109	8-729-048-69	s	TRANSISTOR 2SJ530S-TL
Q3110	8-729-230-49	s	TRANSISTOR 2SC2712-YG
Q3201	1-801-806-11	s	TRANSISTOR DTC144EKA
R3107	1-249-389-11	s	RES,CARBON 4.7 1/4W
R3111	1-216-681-11	s	RESISTOR,CHIP 18K 1/10W (2012)
R3112	1-216-647-11	s	RESISTOR,CHIP 680 1/10W (2012)
R3113	1-216-677-11	s	RESISTOR,CHIP 12K 1/10W(2012)
R3114	1-216-627-11	s	RESISTOR,CHIP 100 1/10W (2012)
R3115	1-216-681-11	s	RESISTOR,CHIP 18K 1/10W (2012)
R3116	1-220-338-11	s	RESISTOR,CHIP 330K 1/2W (4532)
R3117	1-220-338-11	s	RESISTOR,CHIP 330K 1/2W (4532)
R3119	1-220-338-11	s	RESISTOR,CHIP 330K 1/2W (4532)
R3120	1-216-001-00	s	RESISTOR, CHIP 10 1/10W(2012)
R3121	1-216-001-00	s	RESISTOR, CHIP 10 1/10W(2012)
R3122	1-249-417-11	s	RESISTOR,CARBON 1K 1/4W(SMALL)
R3123	1-216-035-00	s	RESISTOR, CHIP 270 1/10W(2012)
R3124	1-216-073-00	s	RESISTOR,CHIP 10K 1/10W(2012)
R3125	1-216-073-00	s	RESISTOR,CHIP 10K 1/10W(2012)
R3126	1-202-933-61	s	RESISTOR, FUSE 0.1 1/2W
R3127	1-216-089-91	s	RESISTOR, CHIP 47K 1/10W(2012)
R3128	1-216-073-00	s	RESISTOR,CHIP 10K 1/10W(2012)
R3129	1-220-993-91	s	RESISTOR,CHIP 0.68 5025
R3130	1-220-993-91	s	RESISTOR,CHIP 0.68 5025
R3131	1-216-073-00	s	RESISTOR,CHIP 10K 1/10W(2012)
R3132	1-216-097-00	s	RESISTOR CHIP 100K 1/10W(2012)
R3133	1-216-073-00	s	RESISTOR,CHIP 10K 1/10W(2012)
R3134	1-216-049-11	s	RESISTOR, CHIP 1K 1/10W(2012)
R3135	1-216-047-91	s	RESISTOR, CHIP 820 1/10W(2125)
R3136	1-216-081-00	s	RESISTOR,CHIP 22K 1/10W(2012)
R3137	1-216-061-00	s	RESISTOR CHIP 3.3K 1/10W(2012)
R3138	1-216-041-00	s	RESISTOR, CHIP 470 1/10W(2012)
R3139	1-216-073-00	s	RESISTOR,CHIP 10K 1/10W(2012)
R3140	1-216-049-11	s	RESISTOR, CHIP 1K 1/10W(2012)
R3141	1-216-663-11	s	RESISTOR,CHIP 3.3K 1/10W(2012)
R3142	1-216-665-11	s	RESISTOR,CHIP 3.9K 1/10W(2012)
R3143	1-216-661-11	s	RESISTOR,CHIP 2.7K 1/10W(2012)

(GB BOARD)

Ref. No. or Q'ty	Part No.	SP	Description
R3144	1-216-659-11	s	RESISTOR,CHIP 2.2K 1/10W(2012)
R3145	1-216-683-11	s	RESISTOR,CHIP 22K 1/10W (2012)
R3152	1-216-095-00	s	RESISTOR, CHIP 82K 1/10W(2012)
R3153	1-216-089-91	s	RESISTOR, CHIP 47K 1/10W(2012)
R3156	1-216-061-00	s	RESISTOR CHIP 3.3K 1/10W(2012)
R3157	1-216-089-91	s	RESISTOR, CHIP 47K 1/10W(2012)
R3158	1-216-073-00	s	RESISTOR,CHIP 10K 1/10W(2012)
R3161	1-216-073-00	s	RESISTOR,CHIP 10K 1/10W(2012)
R3201	1-216-073-00	s	RESISTOR,CHIP 10K 1/10W(2012)
R3202	1-216-057-00	s	RESISTOR CHIP 2.2K 1/10W(2012)
R3203	1-216-073-00	s	RESISTOR,CHIP 10K 1/10W(2012)
R3204	1-216-073-00	s	RESISTOR,CHIP 10K 1/10W(2012)
R3205	1-216-073-00	s	RESISTOR,CHIP 10K 1/10W(2012)
R3206	1-216-097-00	s	RESISTOR CHIP 100K 1/10W(2012)
R3207	1-216-105-91	s	RESISTOR,CHIP 220K 1/10W(2125)
R3208	1-240-247-11	s	RESISTOR, SQUARE TYPE CHIP 0.1
R3321	1-216-073-00	s	RESISTOR,CHIP 10K 1/10W(2012)
R3322	1-216-073-00	s	RESISTOR,CHIP 10K 1/10W(2012)
R3323	1-216-073-00	s	RESISTOR,CHIP 10K 1/10W(2012)
R3324	1-216-097-00	s	RESISTOR CHIP 100K 1/10W(2012)
R3325	1-216-073-00	s	RESISTOR,CHIP 10K 1/10W(2012)
R3326	1-216-083-00	s	RESISTOR CHIP 27K 1/10W(2012)
R3327	1-216-049-11	s	RESISTOR, CHIP 1K 1/10W(2012)
R3330	1-216-097-00	s	RESISTOR CHIP 100K 1/10W(2012)
R3331	1-216-085-00	s	RESISTOR CHIP 33K 1/10W(2012)
T3100	1-437-380-11	s	TRANSFORMER, CONVERTER

GC BOARD
---

*a:[Serial No. 10001 - 5000000 ;for VPL-CS4]
*b:[Serial No. 10001 - 12050 ;for VPL-CX4]
*c:[Serial No. 12051 - 5000000 ;for VPL-CX4]
*d:[Serial No. 5000001 - ;for VPL-CS4/CX4]

Ref. No. or Q'ty	Part No.	SP	Description
1pc	*c A-1300-311-A	s	MOUNTED CIRCUIT BOARD, GC
1pc	*a A-1316-569-A	s	MOUNTED CIRCUIT BOARD, GC
1pc	*b A-1316-569-A	s	MOUNTED CIRCUIT BOARD, GC
1pc	*d A-1316-577-A	s	MOUNTED CIRCUIT BOARD, GC
C4101	1-115-339-11	s	CAPACITOR,CERAMIC 0.1MF/50V
C4102	1-115-339-11	s	CAPACITOR,CERAMIC 0.1MF/50V
C4103	1-126-397-11	s	CAPACITOR ELECT 33MF/25V(CHIP)
C4104	1-126-397-11	s	CAPACITOR ELECT 33MF/25V(CHIP)
C4105	1-126-397-11	s	CAPACITOR ELECT 33MF/25V(CHIP)
C4106	1-115-339-11	s	CAPACITOR,CERAMIC 0.1MF/50V
C4107	1-127-738-11	s	CAPACITOR, CERAMIC 4.7MF/25V
C4108	1-115-339-11	s	CAPACITOR,CERAMIC 0.1MF/50V
C4109	1-126-397-11	s	CAPACITOR ELECT 33MF/25V(CHIP)
C4110	1-117-681-11	s	CAPACITOR, ELECT 100MF/16V
C4111	1-115-339-11	s	CAPACITOR,CERAMIC 0.1MF/50V
C4112	1-126-204-11	s	CAPACITOR, ELECT 47MF/16V(CHIP
C4113	1-115-339-11	s	CAPACITOR,CERAMIC 0.1MF/50V
C4114	1-127-738-11	s	CAPACITOR, CERAMIC 4.7MF/25V
CN4101	1-580-056-21	o	PIN,CONNECTOR 3P
CN4102	1-580-056-21	o	PIN,CONNECTOR 3P
CN4104	1-580-056-21	o	PIN,CONNECTOR 3P
CN4203	1-770-625-21	s	PIN, CONNECTOR 8P
D4101	8-719-055-30	s	DIODE D1FS4A-TA
D4102	8-719-914-43	s	DIODE DAN202K
D4103	8-719-055-30	s	DIODE D1FS4A-TA
D4104	8-719-914-43	s	DIODE DAN202K
D4105	8-719-055-30	s	DIODE D1FS4A-TA
IC4101	8-759-650-38	s	IC LT1374IS8
IC4102	8-759-388-31	s	IC PQ20VZ1U
L4101	1-416-606-11	s	COIL, CHOKE (SMD)
Q4101	8-729-230-49	s	TRANSISTOR 2SC2712-YG
Q4102	8-729-230-49	s	TRANSISTOR 2SC2712-YG
R4101	1-216-081-00	s	RESISTOR,CHIP 22K 1/10W(2012)
R4102	1-216-081-00	s	RESISTOR,CHIP 22K 1/10W(2012)
R4103	1-216-697-91	s	RESISTOR,CHIP 82K 1/10W
R4104	1-216-683-11	s	RESISTOR,CHIP 22K 1/10W (2012)
R4105	1-216-683-11	s	RESISTOR,CHIP 22K 1/10W (2012)
R4106	1-216-675-11	s	RESISTOR,CHIP 10K 1/10W(2012)
R4107	1-216-073-00	s	RESISTOR,CHIP 10K 1/10W(2012)
R4108	1-216-665-11	s	RESISTOR,CHIP 3.9K 1/10W(2012)
R4109	1-216-695-11	s	RESISTOR,CHIP 68K 1/10W(2012)
R4110	1-216-295-91	s	CONDUCTOR, CHIP (2012)
R4111	1-216-089-91	s	RESISTOR, CHIP 47K 1/10W(2012)
R4112	1-216-675-11	s	RESISTOR,CHIP 10K 1/10W(2012)
R4113	1-216-075-00	s	RESISTOR CHIP 12K 1/10W(2012)
R4114	1-216-073-00	s	RESISTOR,CHIP 10K 1/10W(2012)
R4115	1-216-671-11	s	RESISTOR,CHIP 6.8K 1/10W(2012)
R4116	1-216-665-11	s	RESISTOR,CHIP 3.9K 1/10W(2012)
R4117	1-216-081-00	s	RESISTOR,CHIP 22K 1/10W(2012)
R4118	1-216-025-00	s	RESISTOR,CHIP 100 1/10W(2012)
R4119	1-216-679-11	s	RESISTOR,CHIP 15K 1/10W (2012)
R4120	1-216-677-11	s	RESISTOR,CHIP 12K 1/10W(2012)
S4101	1-762-984-11	s	SWITCH, PUSH

H BOARD

*a:[Serial No. 10001 - 5000000 ;for VPL-CS4]
*b:[Serial No. 10001 - 5000000 ;for VPL-CX4]
*c:[Serial No. 5000001 - ;for VPL-CS4/CX4]

Ref. No. or Q'ty	Part No.	SP	Description
1pc	*b A-1300-316-A	s	MOUNTED CIRCUIT BOARD, H
1pc	*a A-1375-219-A	s	MOUNTED CIRCUIT BOARD, H
1pc	*c A-1375-224-A	s	MOUNTED CIRCUIT BOARD, H
C001	1-107-826-11	s	CAPACITOR,CHIP CERAMIC 0.1MF
CN001	1-770-625-21	s	PIN, CONNECTOR 8P
CN002	1-770-619-11	o	PIN, CONNECTOR 2P
CN003	1-770-619-11	o	PIN, CONNECTOR 2P
D001	8-719-024-77	s	DIODE HN1D03FU-TE85L
R001	1-216-833-11	s	RESISTOR,CHIP 10K 1/16W (1608)
R002	1-216-833-11	s	RESISTOR,CHIP 10K 1/16W (1608)
R003	1-216-838-11	s	RESISTOR CHIP 27K 1/16W(1608)
R004	1-216-834-11	s	RESISTOR,CHIP 12K 1/16W 1608
R005	1-218-867-11	s	RESISTOR,CHIP 6.8K 1/10W(1608)
R006	1-216-828-11	s	RESISTOR, CHIP 3.9K 1/16W 1608
R007	1-216-826-11	s	RESISTOR,CHIP 2.7K 1/16W(1608)
R008	1-216-825-11	s	RESISTOR,CHIP 2.2K 1/16W 1608
R009	1-216-823-11	s	RESISTOR, CHIP 1.5K 1/16W
R010	1-216-824-11	s	RESISTOR, CHIP 1.8K 1/16W 1608
R011	1-216-826-11	s	RESISTOR,CHIP 2.7K 1/16W(1608)
R012	1-216-825-11	s	RESISTOR,CHIP 2.2K 1/16W 1608
R013	1-216-823-11	s	RESISTOR, CHIP 1.5K 1/16W
R014	1-216-824-11	s	RESISTOR, CHIP 1.8K 1/16W 1608
S001	1-771-105-11	s	SWITCH, TACTILE
S002	1-771-105-11	s	SWITCH, TACTILE
S003	1-771-105-11	s	SWITCH, TACTILE
S004	1-771-105-11	s	SWITCH, TACTILE
S005	1-771-105-11	s	SWITCH, TACTILE
S006	1-771-105-11	s	SWITCH, TACTILE
S007	1-771-105-11	s	SWITCH, TACTILE
S008	1-771-105-11	s	SWITCH, TACTILE
S009	1-771-105-11	s	SWITCH, TACTILE
S010	1-771-105-11	s	SWITCH, TACTILE

NF BOARD

*a:[Serial No. 10001 - 5000000 ;for VPL-CS4]
*b:[Serial No. 10001 - 5000000 ;for VPL-CX4]
*c:[Serial No. 5000001 - ;for VPL-CS4/CX4]

Ref. No. or Q'ty	Part No.	SP	Description
1pc	*a A-1391-121-A	s	MOUNTED CIRCUIT BOARD, NF
1pc	*c A-1391-147-A	s	MOUNTED CIRCUIT BOARD, NF
1pc	*b A-1400-542-A	s	MOUNTED CIRCUIT BOARD, NF
C071	1-113-985-11	s	CAPACITOR,TANTALUM 10MF/20V
CN071	1-770-620-21	s	PIN, CONNECTOR 3P
IC071	8-749-012-17	s	IC RS-140-T
R071	1-216-805-11	s	RESISTOR,CHIP 47 1/16W 1608
R072	1-216-809-11	s	RESISTOR,CHIP 100 1/16W 1608

QA BOARD ;for VPL-CX4

---

*a:[Serial No. 10001 - 5000000 ;for VPL-CX4]
*b:[Serial No. 5000001 - ;for VPL-CX4]

Ref. No. or Q'ty	Part No.	SP	Description
1pc	*b A-1275-217-A	s	MOUNTED CIRCUIT BOARD, QA
1pc	*a A-1300-317-A	s	MOUNTED CIRCUIT BOARD, QA
C401	1-162-921-11	s	CAPACITOR,CERAMIC 33PF/50V CH
C402	1-162-921-11	s	CAPACITOR,CERAMIC 33PF/50V CH
C403	1-124-778-00	s	CAPACITOR,ELECT 22MF/6.3V
C404	1-107-826-11	s	CAPACITOR,CHIP CERAMIC 0.1MF
C405	1-162-970-11	s	CAPACITOR CERAMIC 0.01MF/25V B
C406	1-107-826-11	s	CAPACITOR,CHIP CERAMIC 0.1MF
C407	1-107-826-11	s	CAPACITOR,CHIP CERAMIC 0.1MF
C408	1-107-826-11	s	CAPACITOR,CHIP CERAMIC 0.1MF
C409	1-107-826-11	s	CAPACITOR,CHIP CERAMIC 0.1MF
C410	1-107-826-11	s	CAPACITOR,CHIP CERAMIC 0.1MF
C411	1-107-826-11	s	CAPACITOR,CHIP CERAMIC 0.1MF
C412	1-107-826-11	s	CAPACITOR,CHIP CERAMIC 0.1MF
C413	1-107-826-11	s	CAPACITOR,CHIP CERAMIC 0.1MF
C414	1-107-826-11	s	CAPACITOR,CHIP CERAMIC 0.1MF
C415	1-162-915-11	s	CAPACITOR,CERAMIC 10PF/50V CH
C416	1-162-915-11	s	CAPACITOR,CERAMIC 10PF/50V CH
C417	1-117-681-11	s	CAPACITOR, ELECT 100MF/16V
C420	1-125-891-11	s	CAPACITOR CERAMIC 0.47MF/10V
C421	1-124-778-00	s	CAPACITOR,ELECT 22MF/6.3V
C422	1-162-921-11	s	CAPACITOR,CERAMIC 33PF/50V CH
C423	1-162-921-11	s	CAPACITOR,CERAMIC 33PF/50V CH
C424	1-107-826-11	s	CAPACITOR,CHIP CERAMIC 0.1MF
C425	1-162-970-11	s	CAPACITOR CERAMIC 0.01MF/25V B
C426	1-107-826-11	s	CAPACITOR,CHIP CERAMIC 0.1MF
C427	1-125-837-11	s	CAPACITOR,CHIP CERAMIC1MF/6.3V
C429	1-107-826-11	s	CAPACITOR,CHIP CERAMIC 0.1MF
CN401	1-793-797-21	o	CONNECTOR, BOARD TO BOARD
D401	8-719-058-24	s	DIODE RB501V-40TE17
D402	8-719-058-24	s	DIODE RB501V-40TE17
D403	8-719-036-94	s	DIODE RD5.6SB-T1
D404	8-719-058-24	s	DIODE RB501V-40TE17
D405	8-719-058-24	s	DIODE RB501V-40TE17
D406	8-719-914-43	s	DIODE DAN202K
FB401	1-500-451-11	s	MICRO INDUCTOR (CHIP) 41P750S
FB402	1-500-451-11	s	MICRO INDUCTOR (CHIP) 41P750S
IC401	8-759-655-55	s	IC UPD72012GB-003-3B4
IC402	8-759-697-26	s	IC RCV4-A1T-MASK-25
IC404	8-759-713-00	s	IC ST72T631K4M1-XX
IC405	8-759-582-91	s	IC S-80842ANNP-ED6-T2
Q401	8-729-029-14	s	TRANSISTOR DTC144EUA-T106
Q402	8-729-216-22	s	TRANSISTOR 2SA1162-G
Q403	8-729-029-14	s	TRANSISTOR DTC144EUA-T106
Q404	8-729-029-14	s	TRANSISTOR DTC144EUA-T106
Q405	8-729-029-14	s	TRANSISTOR DTC144EUA-T106
Q406	8-729-216-22	s	TRANSISTOR 2SA1162-G
Q407	8-729-029-14	s	TRANSISTOR DTC144EUA-T106
R401	1-216-809-11	s	RESISTOR,CHIP 100 1/16W 1608
R402	1-216-835-11	s	RESISTOR,CHIP 15K 1/16W
R403	1-216-823-11	s	RESISTOR, CHIP 1.5K 1/16W
R404	1-216-835-11	s	RESISTOR,CHIP 15K 1/16W
R406	1-216-799-11	s	RESISTOR, CHIP 15 1/16W 1608

(QA BOARD ;for VPL-CX4)

Ref. No. or Q'ty	Part No.	SP	Description
R407	1-216-799-11	s	RESISTOR, CHIP 15 1/16W 1608
R408	1-216-799-11	s	RESISTOR, CHIP 15 1/16W 1608
R409	1-216-799-11	s	RESISTOR, CHIP 15 1/16W 1608
R410	1-216-821-11	s	RESISTOR,CHIP 1.0K 1/16W(1608)
R411	1-216-857-11	s	RESISTOR,CHIP 1M 1/16W(1608)
R412	1-216-825-11	s	RESISTOR,CHIP 2.2K 1/16W 1608
R413	1-216-835-11	s	RESISTOR,CHIP 15K 1/16W
R414	1-216-835-11	s	RESISTOR,CHIP 15K 1/16W
R415	1-216-835-11	s	RESISTOR,CHIP 15K 1/16W
R416	1-216-835-11	s	RESISTOR,CHIP 15K 1/16W
R417	1-218-665-11	s	RESISTOR,CHIP 75 1/16W (1608)
R418	1-216-833-11	s	RESISTOR,CHIP 10K 1/16W (1608)
R419	1-216-830-11	s	RESISTOR,CHIP 5.6K 1/16W 1608
R420	1-216-833-11	s	RESISTOR,CHIP 10K 1/16W (1608)
R421	1-216-833-11	s	RESISTOR,CHIP 10K 1/16W (1608)
R422	1-216-799-11	s	RESISTOR, CHIP 15 1/16W 1608
R423	1-216-799-11	s	RESISTOR, CHIP 15 1/16W 1608
R424	1-216-799-11	s	RESISTOR, CHIP 15 1/16W 1608
R425	1-216-799-11	s	RESISTOR, CHIP 15 1/16W 1608
R427	1-216-799-11	s	RESISTOR, CHIP 15 1/16W 1608
R428	1-216-799-11	s	RESISTOR, CHIP 15 1/16W 1608
R429	1-216-835-11	s	RESISTOR,CHIP 15K 1/16W
R430	1-216-835-11	s	RESISTOR,CHIP 15K 1/16W
R431	1-216-833-11	s	RESISTOR,CHIP 10K 1/16W (1608)
R432	1-216-823-11	s	RESISTOR, CHIP 1.5K 1/16W
R433	1-216-833-11	s	RESISTOR,CHIP 10K 1/16W (1608)
R434	1-216-845-11	s	RESISTOR,CHIP 100K 1/16W(1608)
R435	1-216-833-11	s	RESISTOR,CHIP 10K 1/16W (1608)
R436	1-216-821-11	s	RESISTOR,CHIP 1.0K 1/16W(1608)
R437	1-216-833-11	s	RESISTOR,CHIP 10K 1/16W (1608)
R438	1-216-827-11	s	RESISTOR, CHIP 3.3K 1/16W 1608
R439	1-216-829-11	s	RESISTOR,CHIP 4.7K 1/16W(1608)
R440	1-216-845-11	s	RESISTOR,CHIP 100K 1/16W(1608)
R441	1-216-841-11	s	RESISTOR, CHIP 47K 1/16W 1608
R442	1-216-841-11	s	RESISTOR, CHIP 47K 1/16W 1608
R443	1-216-821-11	s	RESISTOR,CHIP 1.0K 1/16W(1608)
R445	1-216-825-11	s	RESISTOR,CHIP 2.2K 1/16W 1608
R446	1-216-809-11	s	RESISTOR,CHIP 100 1/16W 1608
R447	1-216-857-11	s	RESISTOR,CHIP 1M 1/16W(1608)
R448	1-216-833-11	s	RESISTOR,CHIP 10K 1/16W (1608)
R449	1-216-864-11	s	CONDUCTOR, CHIP (1608)
R450	1-216-823-11	s	RESISTOR, CHIP 1.5K 1/16W
R451	1-216-809-11	s	RESISTOR,CHIP 100 1/16W 1608
R452	1-216-809-11	s	RESISTOR,CHIP 100 1/16W 1608
R454	1-216-864-11	s	CONDUCTOR, CHIP (1608)
R455	1-216-839-11	s	RESISTOR,CHIP 33K 1/16W 1608
X401	1-781-163-11	s	VIBRATOR, OSCILLATOR
X402	1-767-340-11	s	VIBRATOR, CRYSTAL
X403	1-781-163-11	s	VIBRATOR, OSCILLATOR

QB BOARD
----

*a:[Serial No. 10001 - 5000000 ;for VPL-CS4]
*b:[Serial No. 10001 - 12050 ;for VPL-CX4]
*c:[Serial No. 12051 - 5000000 ;for VPL-CX4]
*d:[Serial No. 5000001 - ;for VPL-CS4/CX4]

Ref. No. or Q'ty	Part No.	SP	Description
1pc *a	A-1275-200-A	s	MOUNTED CIRCUIT BOARD, QB
1pc *b	A-1275-200-A	s	MOUNTED CIRCUIT BOARD, QB
1pc *d	A-1275-207-A	s	MOUNTED CIRCUIT BOARD, QB
1pc *c	A-1300-314-A	s	MOUNTED CIRCUIT BOARD, QB
C501	1-124-779-00	s	CAPACITOR,ELECT 10MF/16V
C502	1-126-204-11	s	CAPACITOR, ELECT 47MF/16V(CHIP
C503	1-126-204-11	s	CAPACITOR, ELECT 47MF/16V(CHIP
C504	1-109-982-11	s	CAPACITOR,CHIP CERAMIC 1MF/10V
CN501	1-770-625-21	s	PIN, CONNECTOR 8P
CN502	1-815-279-11	s	CONNECTOR, (S) TERMINAL 4P
D501	8-719-036-94	s	DIODE RD5.6SB-T1
D502	8-719-036-94	s	DIODE RD5.6SB-T1
D503	8-719-036-94	s	DIODE RD5.6SB-T1
J501	1-565-795-11	s	JACK, PIN (PC BOARD)
L501	1-414-753-91	s	INDUCTOR 4.7UH
L502	1-412-363-11	s	FERRITE, EMI (SMD)
L503	1-412-363-11	s	FERRITE, EMI (SMD)
L504	1-412-363-11	s	FERRITE, EMI (SMD)
Q501	8-729-230-49	s	TRANSISTOR 2SC2712-YG
Q502	8-729-230-49	s	TRANSISTOR 2SC2712-YG
Q503	8-729-230-49	s	TRANSISTOR 2SC2712-YG
R501	1-216-837-11	s	RESISTOR,CHIP 22K 1/16W 1608
R502	1-216-624-11	s	RESISTOR,CHIP 75 1/10W(2012)
R503	1-216-837-11	s	RESISTOR,CHIP 22K 1/16W 1608
R504	1-216-821-11	s	RESISTOR,CHIP 1.0K 1/16W(1608)
R505	1-216-809-11	s	RESISTOR,CHIP 100 1/16W 1608
R506	1-216-837-11	s	RESISTOR,CHIP 22K 1/16W 1608
R507	1-216-624-11	s	RESISTOR,CHIP 75 1/10W(2012)
R508	1-216-837-11	s	RESISTOR,CHIP 22K 1/16W 1608
R509	1-216-809-11	s	RESISTOR,CHIP 100 1/16W 1608
R510	1-216-821-11	s	RESISTOR,CHIP 1.0K 1/16W(1608)
R511	1-216-837-11	s	RESISTOR,CHIP 22K 1/16W 1608
R512	1-216-624-11	s	RESISTOR,CHIP 75 1/10W(2012)
R513	1-216-837-11	s	RESISTOR,CHIP 22K 1/16W 1608
R514	1-216-809-11	s	RESISTOR,CHIP 100 1/16W 1608
R515	1-216-821-11	s	RESISTOR,CHIP 1.0K 1/16W(1608)

V BOARD
----

*a:[Serial No. 10001 - 5000000 ;for VPL-CS4]
*b:[Serial No. 10001 - 5000000 ;for VPL-CX4]
*c:[Serial No. 5000001 - ;for VPL-CS4/CX4]

Ref. No. or Q'ty	Part No.	SP	Description
1pc *a	A-1342-599-A	s	MOUNTED CIRCUIT BOARD, V
1pc *c	A-1342-615-A	s	MOUNTED CIRCUIT BOARD, V
1pc *b	A-1400-543-A	s	MOUNTED CIRCUIT BOARD, V
CN701	1-770-619-11	o	PIN, CONNECTOR 2P
S701	1-762-984-11	s	SWITCH, PUSH

4-4. Accessories

```
----------------------------------------
PACKING MATERIALS & SUPPLIED ACCESSORIES
----------------------------------------

*a:[Serial No. 10001 - 5000000 ;for VPL-CS4]
*b:[Serial No. 5000001 - ;for VPL-CS4]
*c:[Serial No. 10001 - 5000000 ;for VPL-CX4]
*d:[Serial No. 5000001 - ;for VPL-CX4]

 Ref. No.
 or Q'ty  Part No.    SP Description

 1pc      1-476-555-21 s REMOTE COMMANDER (RM-PJ2)
 1pc      9-885-010-99 s LID, BATTERY (RM-PJ2)
 1pc      1-476-556-21 s REMOTE COMMANDER (RM-PJM11)
 1pc      9-885-005-85 s COVER, BATTERY (RM-PJM11)
 1pc      1-500-386-21 s FILTER, CLAMP (FERRITE CORE)

 1pc    ⚠ ------------ s CORD, POWER
  (See Sec.1-2-17. Warning on Power Connection.)
 1pc    *c 1-790-081-31 s CABLE, USB
 1pc    *d 1-790-081-31 s CABLE, USB
 1pc    *c 1-791-992-31 s CABLE ASSY(15PDSUBCONNECTORX2)
 1pc    *d 1-791-992-31 s CABLE ASSY(15PDSUBCONNECTORX2)

 1pc      4-082-730-01 s FILTER
 1pc      4-082-733-01 o CASE, CARRYING
 1pc    *a 4-083-098-01 s INSTRUCTION
 1pc    *c 4-083-098-01 s INSTRUCTION
 1pc    *b 4-083-098-11 s FLYER

 1pc    *d 4-083-098-11 s FLYER
 1pc    *c 4-083-480-04 s PACK, CD-ROM
 1pc    *d 4-083-480-04 s PACK, CD-ROM
 1pc    *c 4-085-848-01 o OPERATING, INSTRUCTIONS
                          (JAPANESE/SIMPLIFIED CHINESE)
 1pc    *c 4-085-848-12 o OPERATING, INSTRUCTIONS
                          (ENGLISH/FRENCH/SPANISH)

 1pc    *c 4-085-848-21 o OPERATING, INSTRUCTIONS
                          (GERMAN/ITALIAN)
 1pc    *d 4-085-848-31 o OPERATING, INSTRUCTIONS
                          (JAPANESE/SIMPLIFIED CHINESE)
 1pc    *d 4-085-848-42 o OPERATING, INSTRUCTIONS
                          (ENGLISH/FRENCH/SPANISH)
 1pc    *d 4-085-848-51 o OPERATING, INSTRUCTIONS
                          (GERMAN/ITALIAN)
 1pc    *c 4-085-849-01 s QUICK REFERENCE CARD

 1pc    *d 4-085-849-11 s QUICK REFERENCE CARD
 1pc    *a 4-085-850-01 o OPERATING, INSTRUCTIONS
                          (JAPANESE/SIMPLIFIED CHINESE)
 1pc    *a 4-085-850-12 o OPERATING, INSTRUCTIONS
                          (ENGLISH/FRENCH/SPANISH)
 1pc    *a 4-085-850-21 o OPERATING, INSTRUCTIONS
                          (GERMAN/ITALIAN)
 1pc    *b 4-085-850-31 o OPERATING, INSTRUCTIONS
                          (JAPANESE/SIMPLIFIED CHINESE)

 1pc    *b 4-085-850-42 o OPERATING, INSTRUCTIONS
                          (ENGLISH/FRENCH/SPANISH)
 1pc    *b 4-085-850-51 o OPERATING, INSTRUCTIONS
                          (GERMAN/ITALIAN)
 1pc    *a 4-085-851-01 s QUICK REFERENCE CARD
 1pc    *b 4-085-851-01 s QUICK REFERENCE CARD
```

Section 5
Block Diagrams

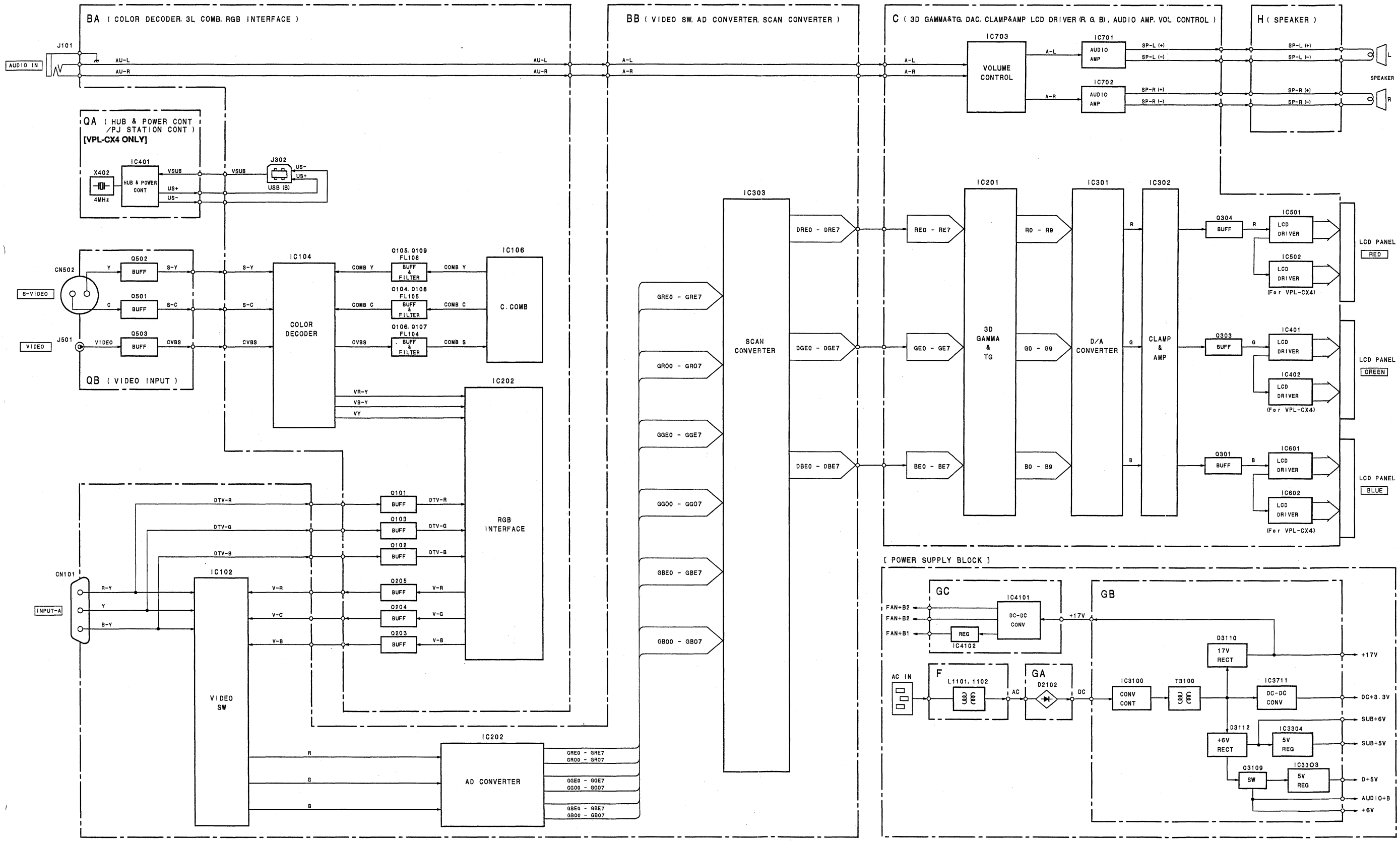

Overall Block

BB (MAIN CPU, A/D CONVERTER, SCAN CONVERTER, SDRAM, RGB INPUT, SYNC SEP)

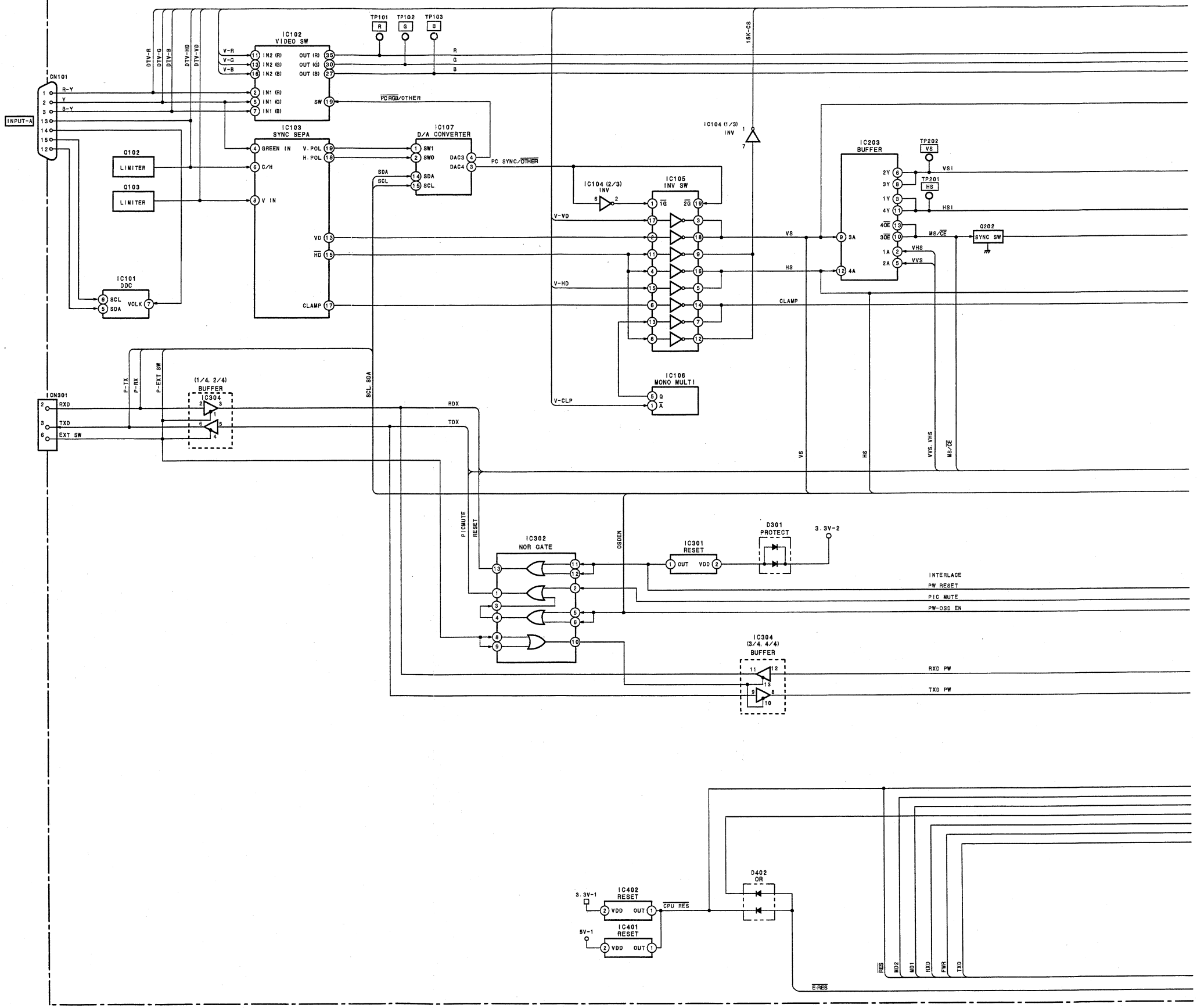

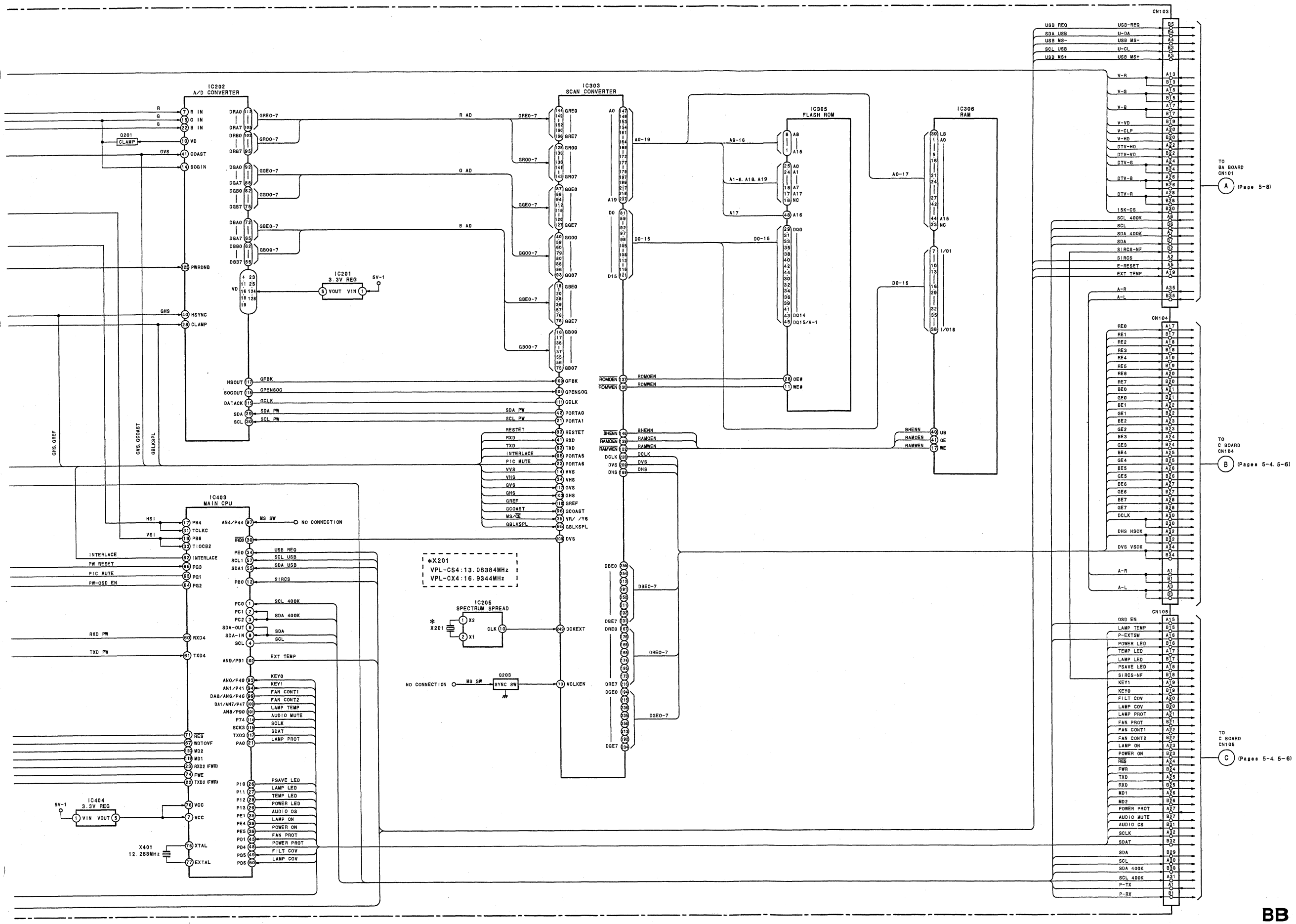
IC202
A/D CONVERTER
IC303
SCAN CONVERTER
IC305
FLASH ROM
IC306
RAM
IC201
3.3V REG
IC403
MAIN CPU
IC404
3.3V REG
IC205
SPECTRUM SPREAD
Q201
CLAMP
Q203
SYNC SW
X401
12.288MHz
*X201
VPL-CS4:13.08384MHz
VPL-CX4:16.9344MHz
CN103
CN104
CN105
TO
BA BOARD
CN101
(Page 5-8)
TO
C BOARD
CN104
(Pages 5-4, 5-6)
TO
C BOARD
CN105
(Pages 5-4, 5-6)

BB Block

For VPL-CS4

C (LCD DRIVE, RGB AMP, AUDIO AMP, 12CH DAC, TIMING GENERATER, 3D GAMMA)

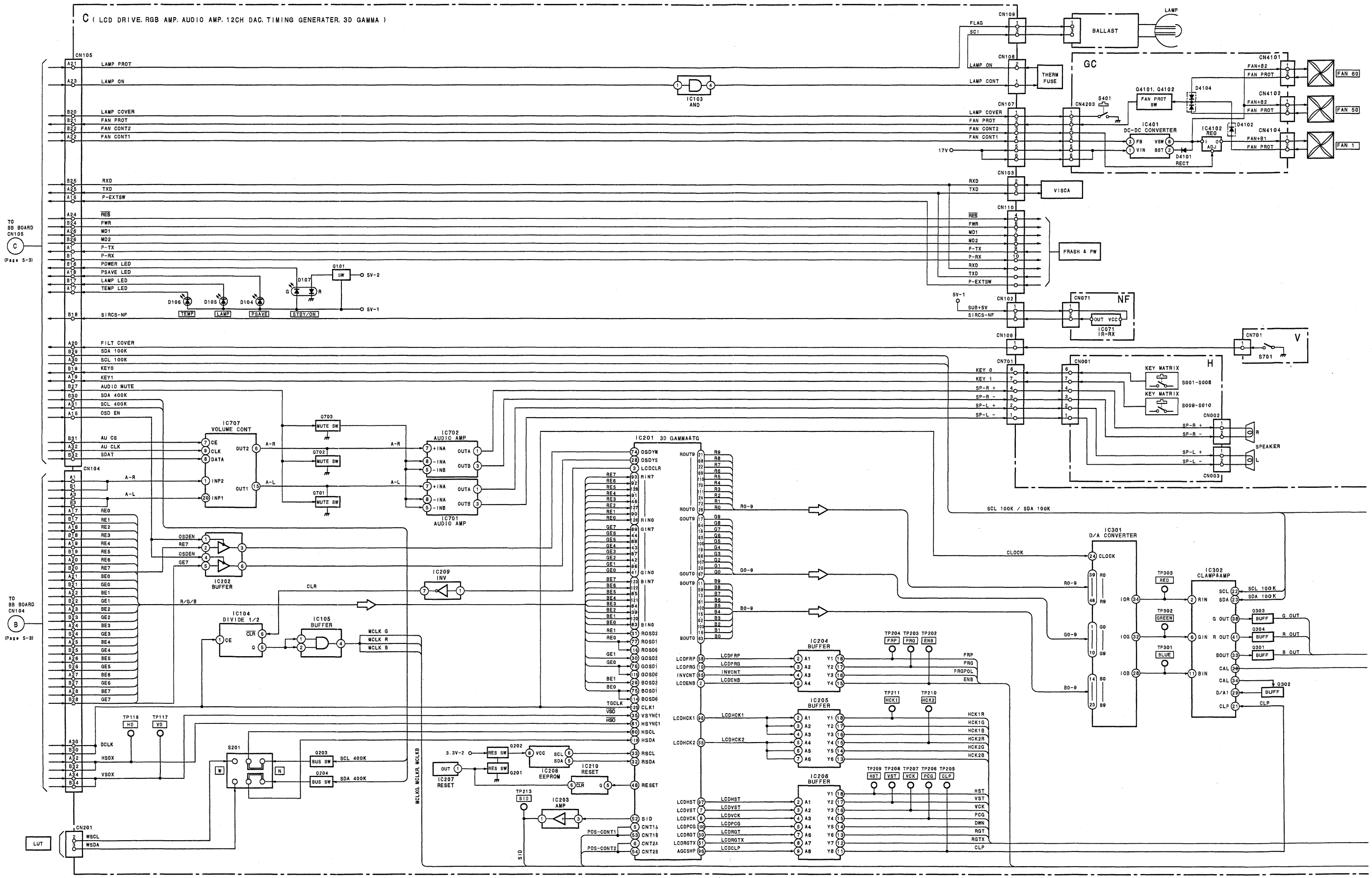

C Block

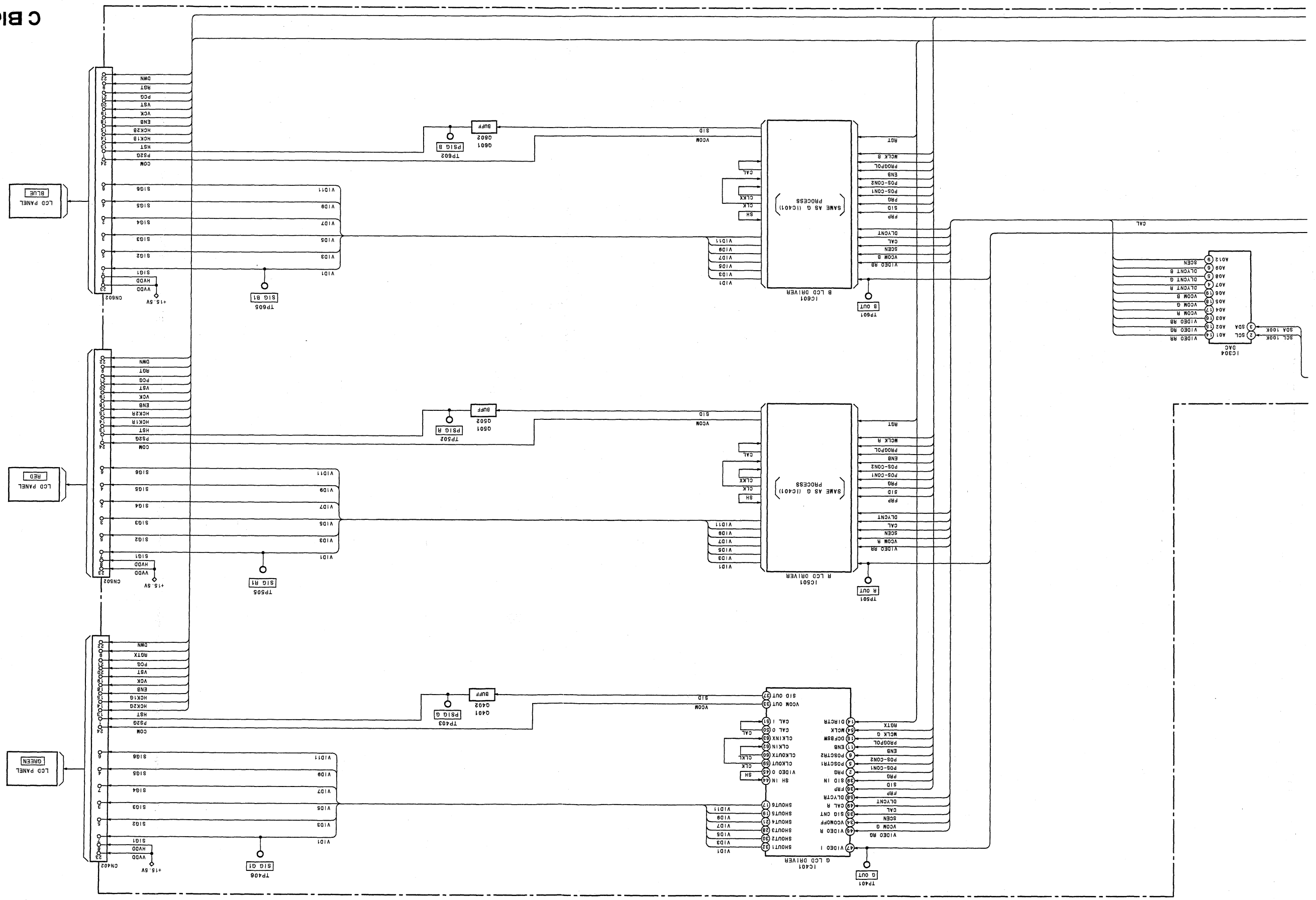
IC601
B LCD DRIVER
SAME AS G (IC401)
PROCESS
IC501
R LCD DRIVER
IC401
G LCD DRIVER
IC604
DAC
LCD PANEL
BLUE
LCD PANEL
RED
LCD PANEL
GREEN
CN602
CN502
CN402
+15.5V
TP605
SIG B1
TP505
SIG R1
TP406
SIG G1
TP601
B OUT
TP501
R OUT
TP401
G OUT
TP602
PSIG B
TP502
PSIG R
TP403
PSIG G
Q601
Q602
Q501
Q502
Q401
Q402
BUFF
SCL 10DX
SDA 10DX
CAL
SAMPLE
HOLD
CLAMP
DLYCNT
SHOUT1
SHOUT2
SHOUT3
SHOUT4
SHOUT5
SHOUT6
VIDEO I
VIDEO RA
VIDEO RB
VIDEO RR
VIDEO R
VIDEO G
VIDEO B
VCOM
SID
SH
CLK
CLKX
PROGPOL
ENB
POS-CONT1
POS-CONT2
PRG
PRB
PRR
SCEN
MCLK
DIRCTR
VCOM OUT
SID OUT
CAL I
CAL O
DCFBSW
CLKINX
CLKIN
CLKOUTX
CLKOUT
POSCTR1
POSCTR2
VIDEO O
SH IN
SID IN
DLYCTR
SID OUT
VCOMOFF
SIO CNT
CAL R
CAL O
CAL I
DIRCTR
MCLK
DCFBSW
CLKINX
CLKIN
CLKOUTX
CLKOUT
POSCTR1
POSCTR2
VIDEO O
SH IN
SID IN
DLYCTR
SID OUT
VCOM OUT
SCEN
VCOM
SID
SH
CLK
CLK

For VPL-CX4

C (LCD DRIVE, RGB AMP, AUDIO AMP, 12CH DAC, TIMING GENERATER, 3D GAMMA)

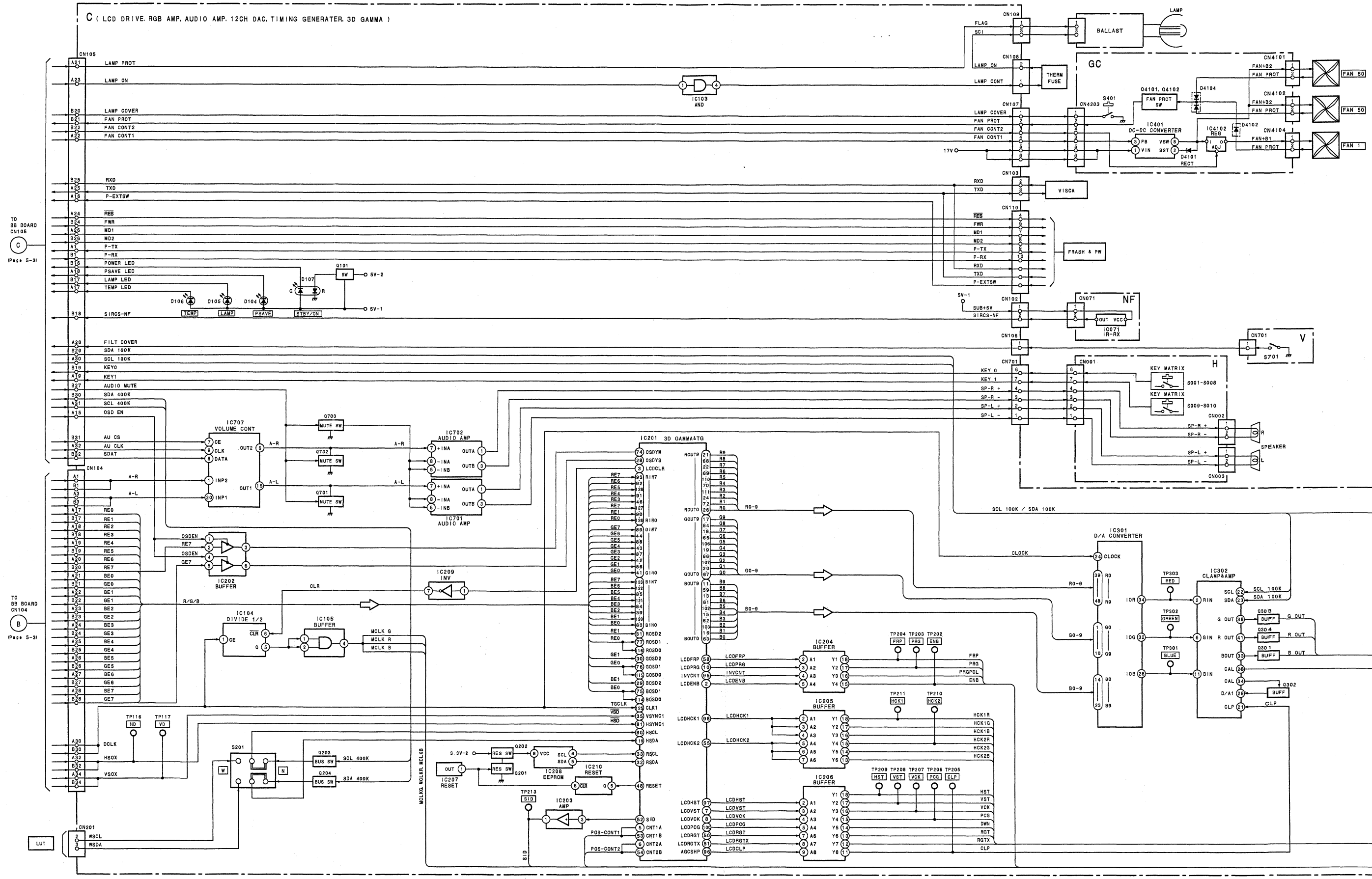

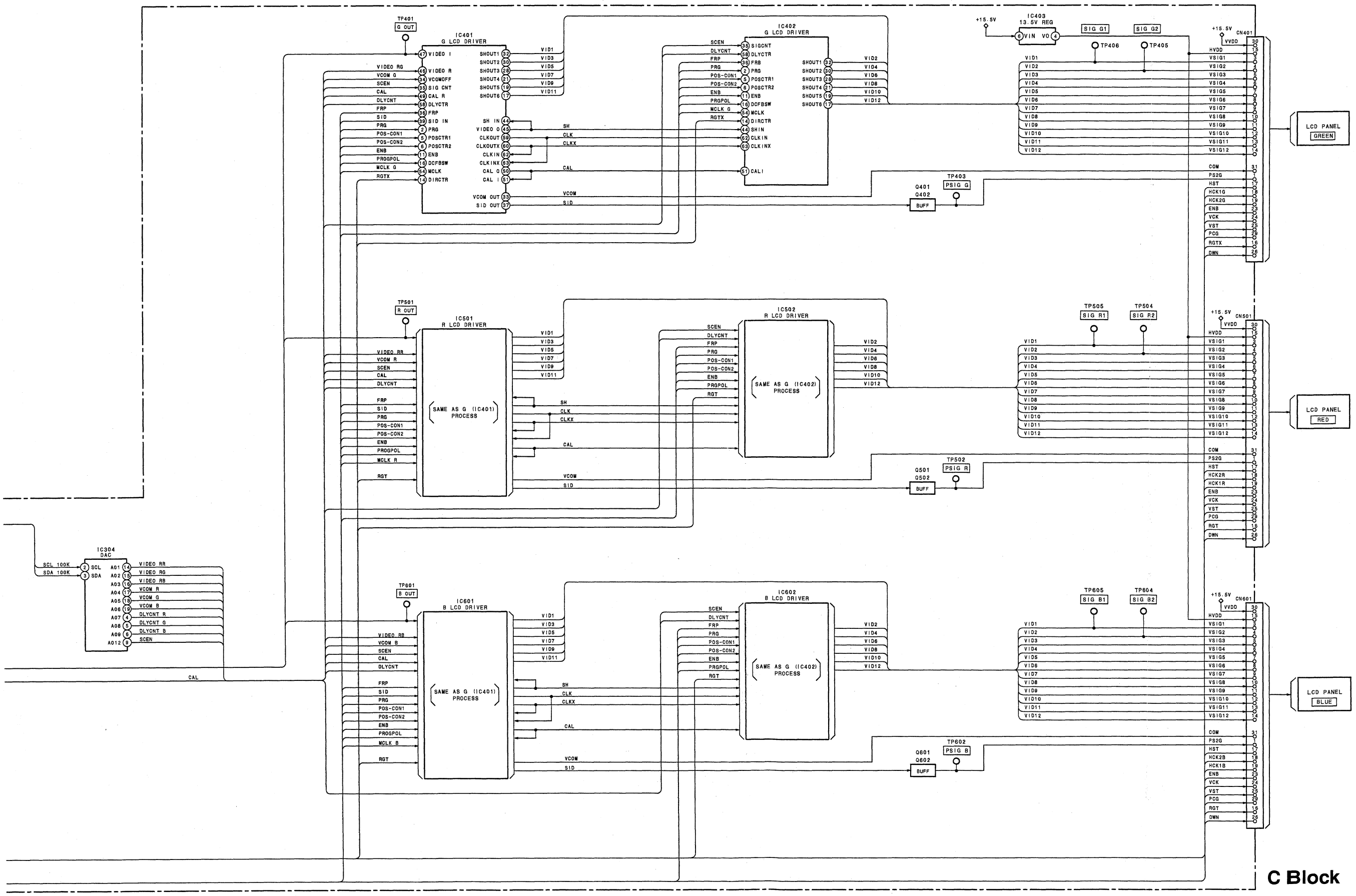
TP401
G OUT
IC401
G LCD DRIVER
VIDEO I
VIDEO R
VCOMOFF
SIG CNT
CAL R
DLYCTR
FRP
SID IN
PRG
POSCTR1
POSCTR2
ENB
DCFBSW
MCLK G
DIRCTR
SHOUT1
SHOUT2
SHOUT3
SHOUT4
SHOUT5
SHOUT6
SH IN
VIDEO O
CLKOUT
CLKOUTX
CLKIN
CLKINX
CAL O
CAL I
VCOM OUT
SID OUT
VID1
VID3
VID5
VID7
VID9
VID11
IC402
G LCD DRIVER
SCEN
DLYCNT
FRP
PRG
POS-CON1
POS-CON2
ENB
PRGPOL
MCLK G
RGTX
SIGCNT
DLYCTR
FRB
PRG
POSCTR1
POSCTR2
ENB
DCFBSW
MCLK
DIRCTR
SHIN
CLKIN
CLKINX
CALI
VID2
VID4
VID6
VID8
VID10
VID12
SH
CLK
CLKX
CAL
VCOM
SID
+15.5V
IC403
13.5V REG
VIN
VO
SIG G1
SIG G2
TP406
TP405
CN401
VVDD
HVDD
VSIG1
VSIG2
VSIG3
VSIG4
VSIG5
VSIG6
VSIG7
VSIG8
VSIG9
VSIG10
VSIG11
VSIG12
COM
PS2G
HST
HCK1G
HCK2G
ENB
VCK
VST
PCG
RGTX
DWN
LCD PANEL
GREEN
TP403
PSIG G
Q401
Q402
BUFF
TP501
R OUT
IC501
R LCD DRIVER
VIDEO RR
VCOM R
SCEN
CAL
DLYCNT
FRP
SID
PRG
POS-CON1
POS-CON2
ENB
PROGPOL
MCLK R
RGT
SAME AS G (IC401) PROCESS
IC502
R LCD DRIVER
SAME AS G (IC402) PROCESS
TP505
SIG R1
TP504
SIG R2
CN501
LCD PANEL
RED
TP502
PSIG R
Q501
Q502
IC304
DAC
SCL 100K
SDA 100K
SCL
SDA
A01
A02
A03
A04
A05
A06
A07
A08
A09
A012
VIDEO RR
VIDEO RG
VIDEO RB
VCOM R
VCOM G
VCOM B
DLYCNT R
DLYCNT G
DLYCNT B
SCEN
CAL
TP601
B OUT
IC601
B LCD DRIVER
IC602
B LCD DRIVER
TP605
SIG B1
TP604
SIG B2
CN601
LCD PANEL
BLUE
TP602
PSIG B
Q601
Q602

C Block

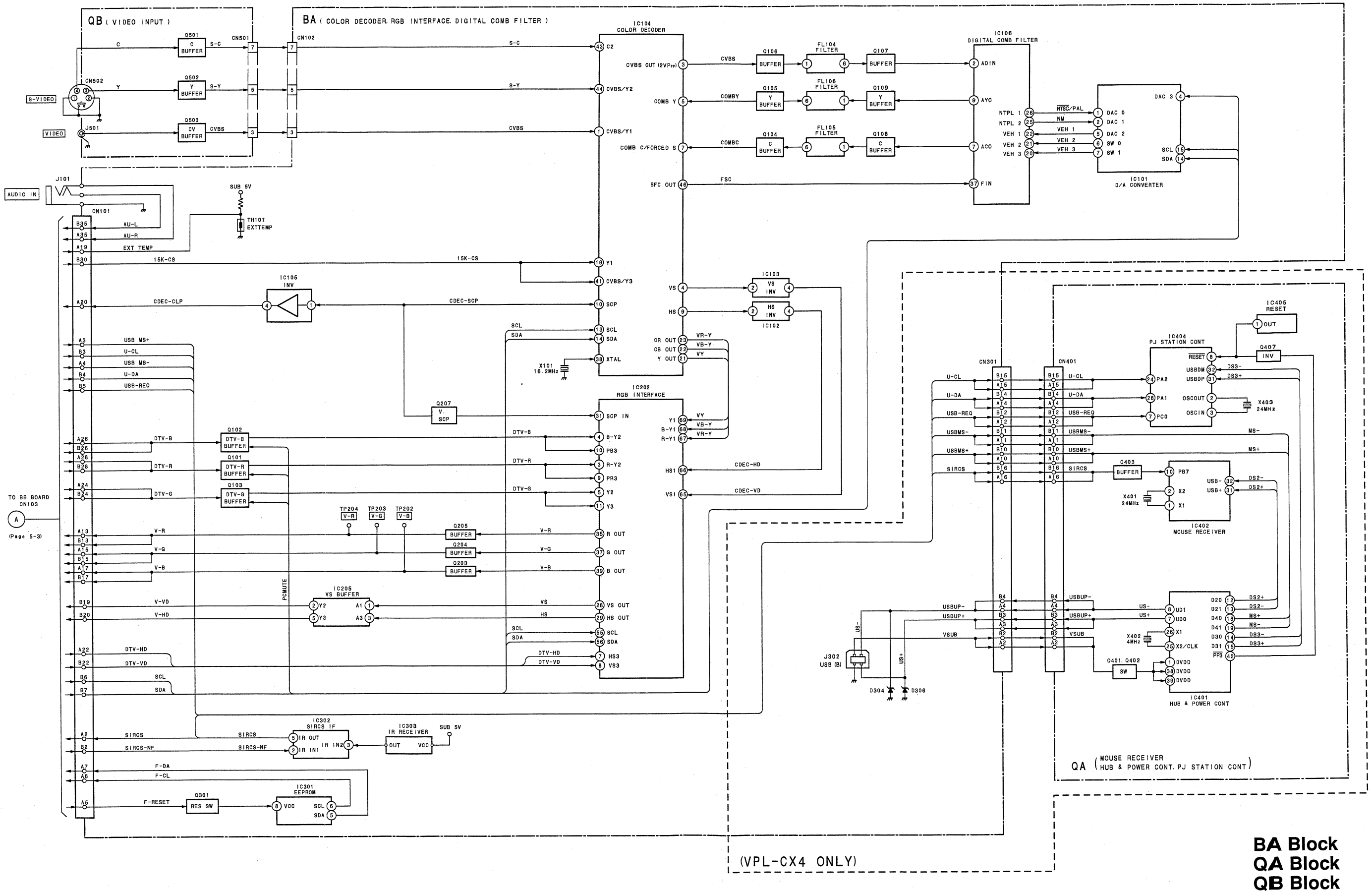

BA Block
QA Block
QB Block

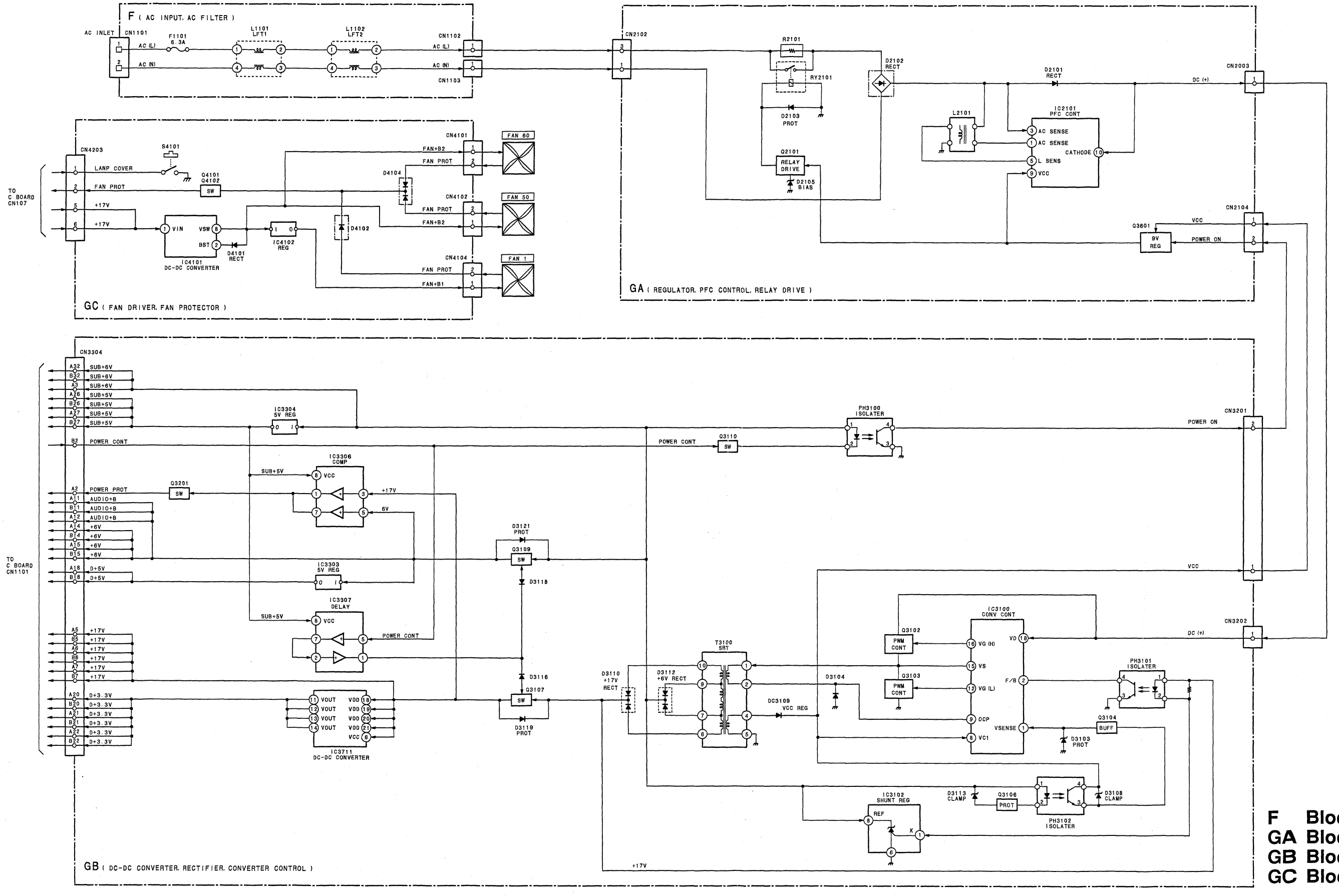

F Block
GA Block
GB Block
GC Block

Section 6
Diagrams

Note:

- Parts marked " * " differ according to the model/destination. Refer to the mount table for each function.
- The parts marked " # " on schematic diagrams are not mounted.
- All capacitors are in µF unless otherwise noted. pF: µµF 50WV or less are not indicated except for electrolytics.
- All electrolytics are in 50 V unless otherwise specified.
- : fusible resistor
- : nonflammable resistor
- : panel designation and adjustment for repair
- Caution when replacing chip parts
  New parts must be attached after removal of the chip.
  Be careful not to heat the minus side of a tantalum capacitor, because it is easily damaged by the heat.

Reference information

RESISTOR	RN	: METAL FILM
	RC	: SOLID
	FPRD	: NONFLAMMABLE CARBON
	FUSE	: NONFLAMMABLE FUSIBLE
	RS	: NONFLAMMABLE METAL OXIDE
	RB	: NONFLAMMABLE CEMENT
	RW	: NONFLAMMABLE WIREWOUND
	※	: ADJUSTMENT RESISTOR
COIL	LF-8L	: MICRO INDUCTOR
CAPACITOR	TA	: TANTALUM
	PS	: STYROL
	PP	: POLYPROPYLENE
	PT	: MYLAR
	MPS	: METALIZED POLYESTER
	MPP	: METALIZED POLYPROPYLENE
	ALB	: BIPOLAR
	ALT	: HIGH TEMPERATURE
	ALR	: HIGH RIPPLE

[Measuring conditions, voltage and waveform]

- A voltage value is the reference value between the measurement point and the earth, when the RGB color bar signal is received from the color bar generator (digital multi-meter used: 10 M ohms/V DC).
- Unit of voltage is V (volt).
- : B+line
- : B– line
- Voltage variations may occur due to normal production tolerances.
- ★ : Measurement disabled.
- Circled numbers indicate the reference waveform.
- : Signal path.

The components identified marked ⚠ are critical for safety.
Replace only with the part number specified.

Les composants identifiés par une marque ⚠ sont critiques pour la sécurité.
Ne les remplacer que par une pièce portant le numéro spécifié.

6-1

6-1. Frame Schematic Diagram

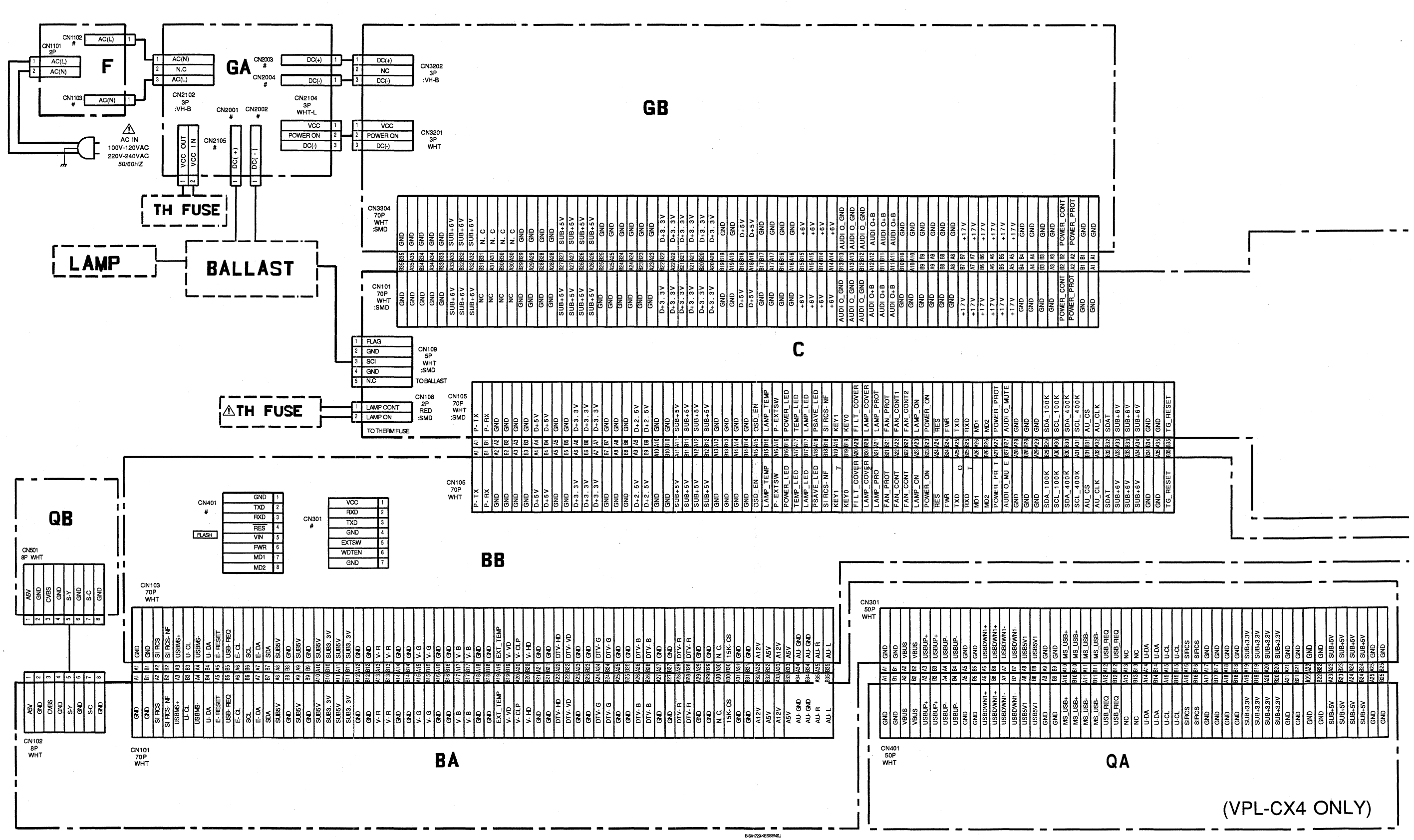

FAN1
FAN2
FAN3
CN4104 3P WHT-L :SMD
TO FAN1
CN4102 3P RED-L :SMD
TO FAN50
CN4101 3P BLUE-L :SMD
TO FAN60
CN4203 8P WHT-L :SMD
GC
LCD (G)
LCD (R)
LCD (B)
CN107 8P WHT :SMD
CN401 (VPL-CX4) 32P FPC :SMD
GREEN
CN501 (VPL-CX4) 32P FPC :SMD
RED
CN601 (VPL-CX4) 32P FPC :SMD
BLUE
VSCA
CN103 5P WHT :SMD
LUT
CN201 4P WHT :SMD
M.OUT
CN301 #
FLASH&PW
CN110 12P WHT :SMD
CN402 (VPL-CS4) 24P FPC :SMD
CN502 (VPL-CS4) 24P FPC :SMD
CN602 (VPL-CS4) 24P FPC :SMD
C
CN104 70P WHT :SMD
BB
CN102 3P WHT :SMD
CN106 2P WHT :SMD
CN701 8P WHT :SMD
CN071 3P WHT :SMD
NF
CN701 2P RED :SMD
V
CN001 8P WHT :SMD
H
CN002 2P WHT :SMD
TO SPEAKER R
CN003 2P WHT :SMD
TO SPEAKER L
SP (R)
SP (L)
B-SX1720-KESSENZU

1
2
3
4
5

VPL-CS4/CX4

6-3 6-3

I J K L M N O P

6-2. Schematic Diagrams and Printed Wiring Boards

BA Board

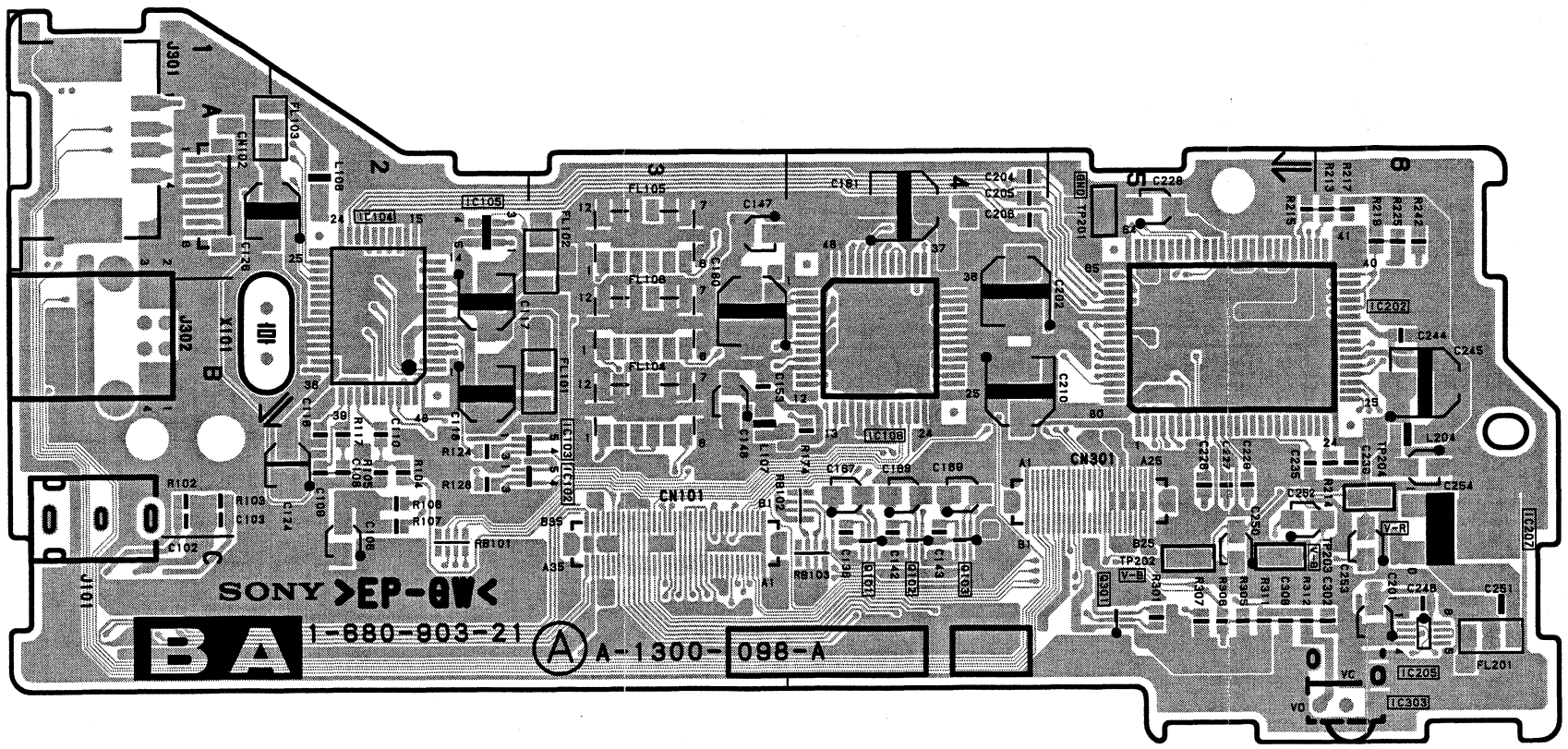

BA -A SIDE-
SUFFIX: -21

BA Board

IC101	*A-2	D101	*A-1
IC102	B-3	D102	*A-1
IC103	B-3	D103	*B-4
IC104	A-2	D201	*A-6
IC105	A-2	D301	*C-1
IC106	B-4	D302	*C-1
IC202	B-6	D303	*C-1
IC205	C-6	D304	*C-1
IC207	B-6	D305	*B-1
IC301	*A-5	D306	*B-1
IC302	*A-5		
IC303	C-6	TP201	A-5
		TP202	C-5
Q101	C-4	TP203	C-6
Q102	C-4	TP204	B-6
Q103	C-4		
Q104	*C-3	*:B Side mount	
Q105	*B-3		
Q106	*B-3		
Q107	*B-3		
Q108	*C-3		
Q109	*B-3		
Q203	*B-5		
Q204	*B-6		
Q205	*B-6		
Q207	*C-6		
Q301	C-5		

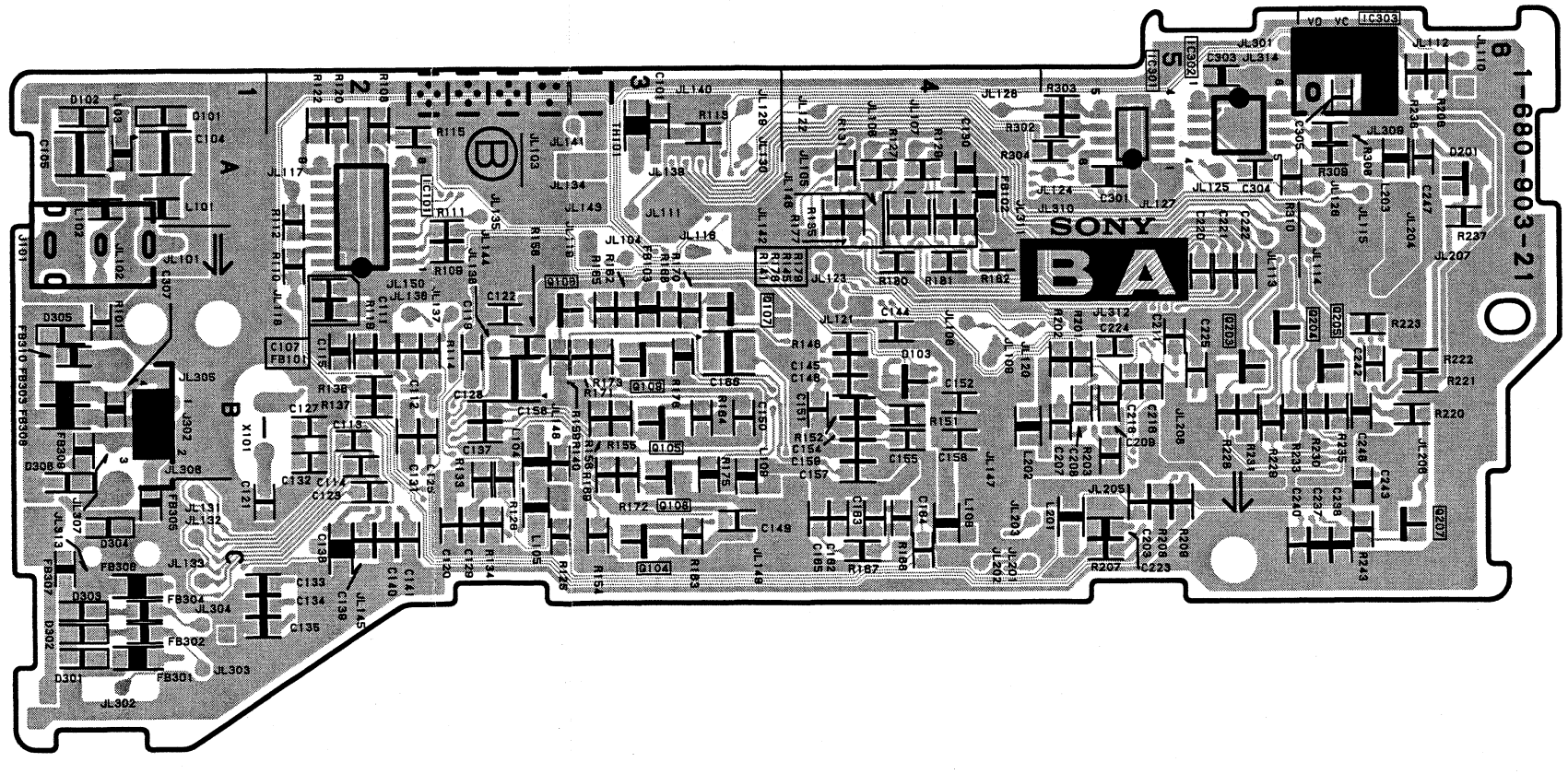

BA -B SIDE-
SUFFIX: -21

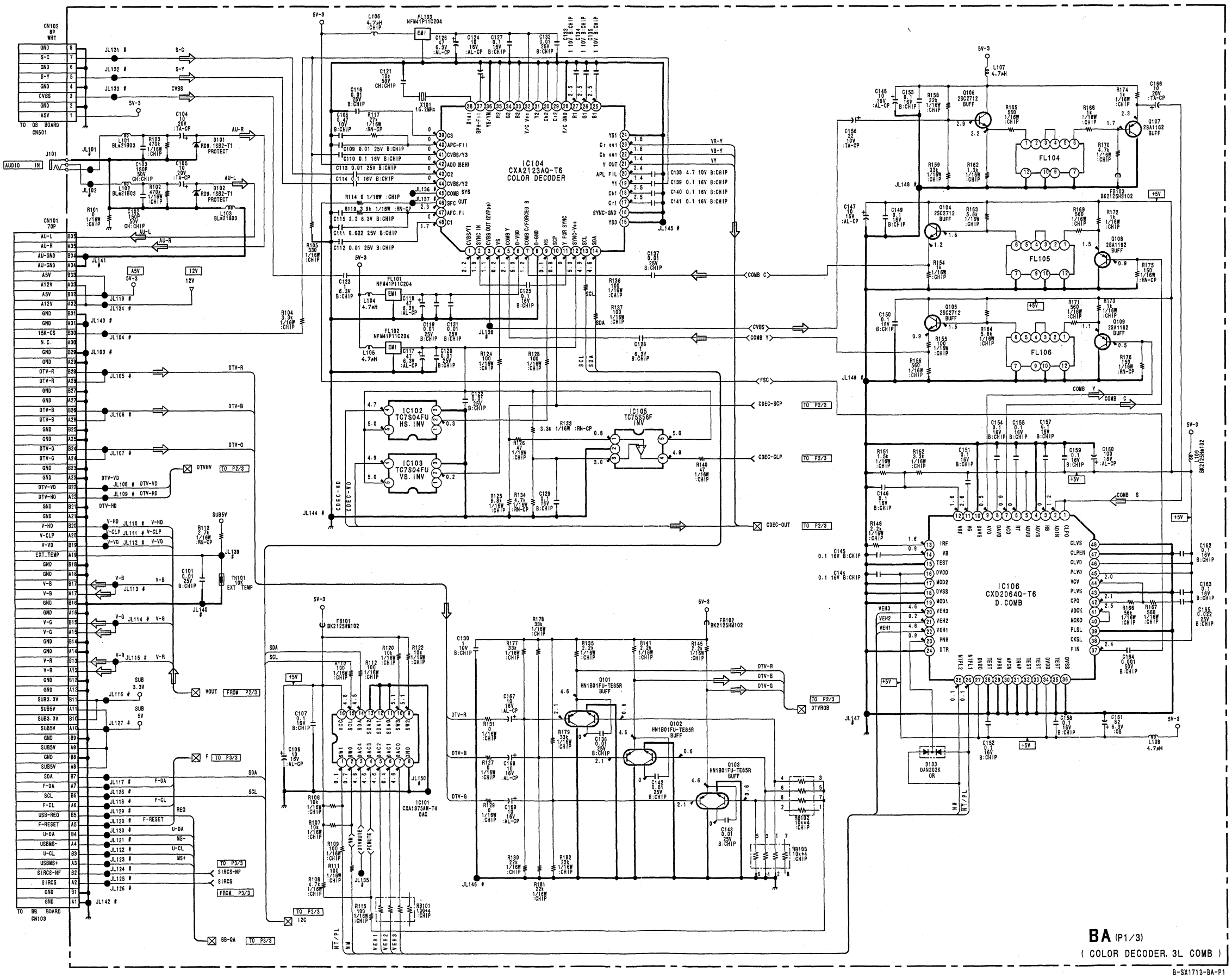

BA (P1/3)
(COLOR DECODER, 3L COMB)

B-SX1713-BA-P1

VPL-CS4/CX4

6-5 6-5

A B C D E F G H

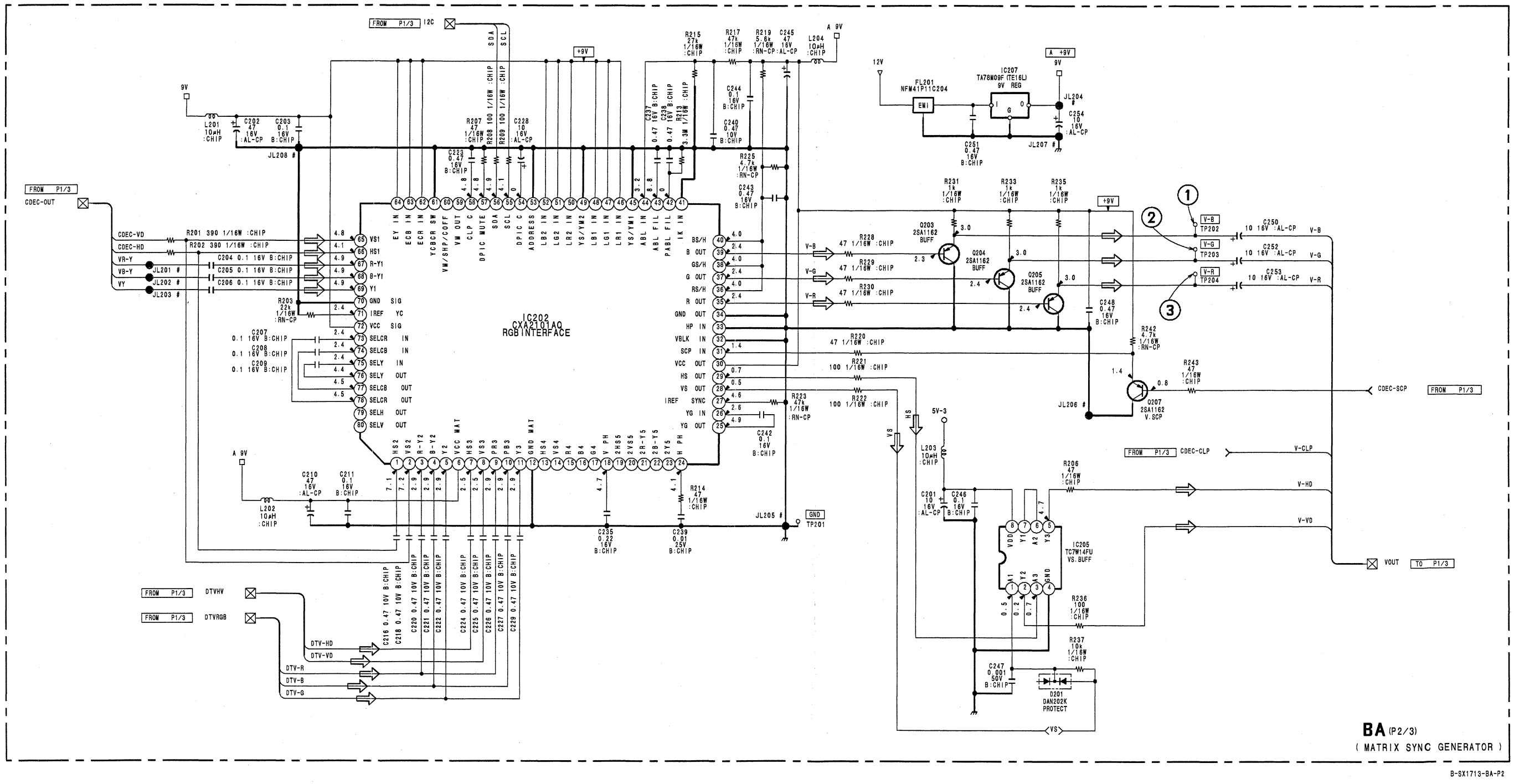
FROM P1/3 I2C
SDA
SCL
+9V
A 9V
9V
L201 10μH :CHIP
C202 47 16V :AL-CP
C203 0.1 16V B:CHIP
JL208 #
R215 27k 1/16W :CHIP
R217 47k 1/16W :CHIP
R219 5.6k 1/16W :RN-CP
C245 47 16V :AL-CP
L204 10μH :CHIP
C244 0.1 16V B:CHIP
C240 0.47 10V B:CHIP
C237 0.47 16V B:CHIP
C238 0.47 16V B:CHIP
R218 3.3M 1/16W :CHIP
R207 47 1/16W :CHIP
R208 100 1/16W :CHIP
R209 100 1/16W :CHIP
C228 10 16V :AL-CP
C223 0.47 16V B:CHIP
R225 4.7k 1/16W :RN-CP
C243 0.47 16V B:CHIP
FROM P1/3
CDEC-OUT
CDEC-VD
CDEC-HD
VR-Y
VB-Y
VY
JL201 #
JL202 #
JL203 #
R201 390 1/16W :CHIP
R202 390 1/16W :CHIP
C204 0.1 16V B:CHIP
C205 0.1 16V B:CHIP
C206 0.1 16V B:CHIP
R203 2k 1/16W :RN-CP
C207 0.1 16V B:CHIP
C208 0.1 16V B:CHIP
C209 0.1 16V B:CHIP
IC202
CXA2101AQ
RGB INTERFACE
EV IN
ECB IN
ECR IN
YCBCR SW
VM/SHP/COFF
VM OUT
CLP C
DPIC MUTE
SDA
SCL
DPIC C
ADDRESS
LB2 IN
LG2 IN
LR2 IN
YS/YM2
LB1 IN
LG1 IN
LR1 IN
YS/YM1
ABL IN
ABL FIL
PABL FIL
IK IN
VS1
HS1
R-Y1
B-Y1
Y1
GND SIG
IREF YC
VCC SIG
SELCR IN
SELCB IN
SELY IN
SELY OUT
SELCB OUT
SELCR OUT
SELH OUT
SELV OUT
BS/H
B OUT
GS/H
G OUT
RS/H
R OUT
GND OUT
HP IN
VBLK IN
SCP IN
VCC OUT
HS OUT
VS OUT
IREF SYNC
YG IN
YG OUT
HS2
VS2
H-Y2
B-Y2
Y2
VCC MAT
HS3
VS3
PR3
PB3
Y3
GND MAT
HS4
VS4
R4
B4
G4
V PH
2HS5
2VS5
2R-Y5
2B-Y5
2Y5
H PH
A 9V
L202 10μH :CHIP
C210 47 16V :AL-CP
C211 0.1 16V B:CHIP
JL205 #
GND
TP201
C235 0.22 16V B:CHIP
C239 0.01 25V B:CHIP
R214 47 1/16W :CHIP
C216 0.47 10V B:CHIP
C218 0.47 10V B:CHIP
C220 0.47 10V B:CHIP
C221 0.47 10V B:CHIP
C222 0.47 10V B:CHIP
C224 0.47 10V B:CHIP
C225 0.47 10V B:CHIP
C226 0.47 10V B:CHIP
C227 0.47 10V B:CHIP
C229 0.47 10V B:CHIP
FROM P1/3 DTVHV
FROM P1/3 DTVRGB
DTV-HD
DTV-VD
DTV-R
DTV-B
DTV-G
12V
FL201 NFM41P11C204
ENI
IC207 TA78M09F (TE16L) 9V REG
A +9V
9V
JL204 #
C254 10 16V :AL-CP
JL207 #
C251 0.47 16V B:CHIP
R231 1k 1/16W :CHIP
R233 1k 1/16W :CHIP
R235 1k 1/16W :CHIP
Q203 2SA1162 BUFF
Q204 2SA1162 BUFF
Q205 2SA1162 BUFF
R228 47 1/16W :CHIP
R229 47 1/16W :CHIP
R230 47 1/16W :CHIP
V-B
V-G
V-R
TP202
TP203
TP204
C250 10 16V :AL-CP
C252 10 16V :AL-CP
C253 10 16V :AL-CP
C248 0.47 16V B:CHIP
R220 47 1/16W :CHIP
R221 100 1/16W :CHIP
R222 100 1/16W :CHIP
R223 47k 1/16W :RN-CP
C242 0.1 16V B:CHIP
R242 4.7k 1/16W :RN-CP
R243 47 1/16W :CHIP
Q207 2SA1162 V.SCP
JL206 #
CDEC-SCP
FROM P1/3
HS
VS
5V-3
L203 10μH :CHIP
C201 10 16V :AL-CP
C246 0.1 16V B:CHIP
FROM P1/3 CDEC-CLP
V-CLP
V-HD
V-VD
R206 47 1/16W :CHIP
IC205 TC7W14FU VS. BUFF
VDD
Y1
A2
Y3
A1
Y2
A3
GND
R236 100 1/16W :CHIP
R237 10k 1/16W :CHIP
C247 0.001 50V B:CHIP
D201 DAN202K PROTECT
VOUT
TO P1/3
BA (P2/3)
(MATRIX SYNC GENERATOR)
B-SX1713-BA-P2

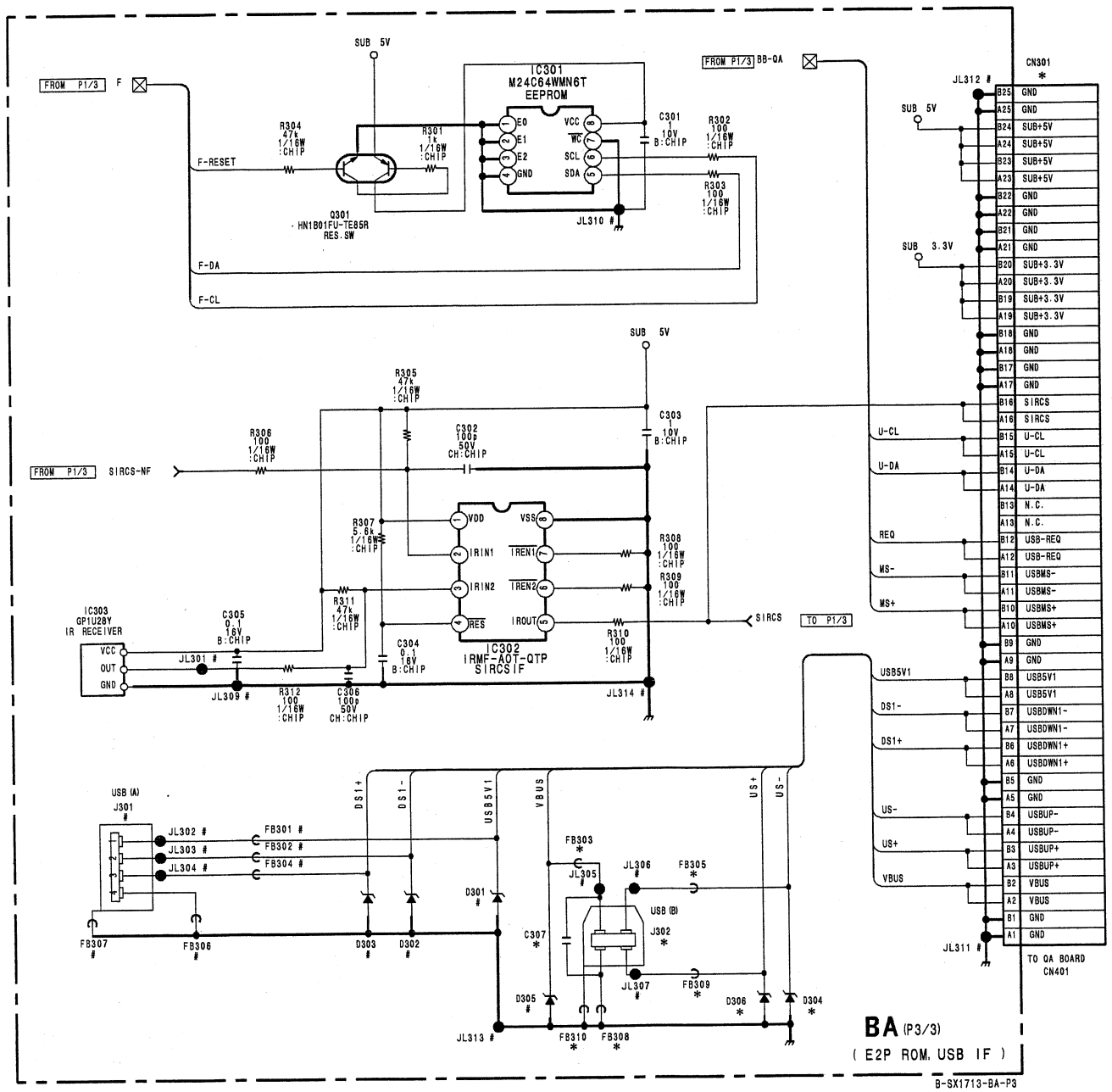

NOTE:*

REF. NO \ MODEL	VPL-CS4	VPL-CX4
C307	NO MOUNT	1 10V B:CHIP
CN301	NO MOUNT	50P B TO B:WHT (RECEPTACLE)
D304	NO MOUNT	UDZSTE-173.9B PROTECT
D306	NO MOUNT	UDZSTE-173.9B PROTECT
FB303	NO MOUNT	FBMH3216HM501NT FERRITE 0μH
FB305	NO MOUNT	BK2125HM601 FERRITE 0μH
FB308	NO MOUNT	FBMH3216HM501NT FERRITE 0μH
FB309	NO MOUNT	BK2125HM601 FERRITE 0μH
FB310	NO MOUNT	0 1/16W:CHIP
J302	NO MOUNT	USB CONNECTOR (B)

CXA1875AM-T4 (IC101)

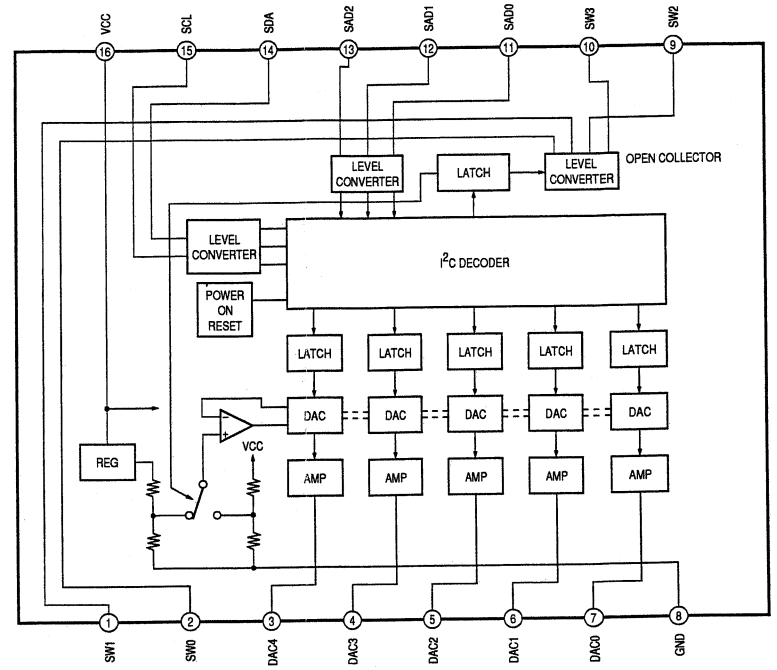

CXD2064Q-T6 (IC106)

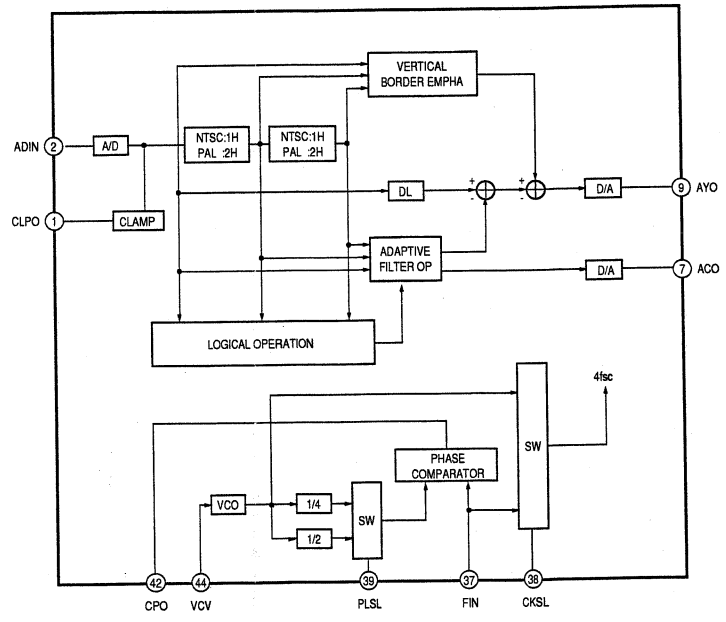

IRMF-AOT-QTP (IC302)

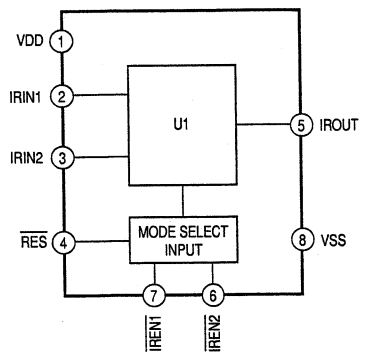

BA Board Waveforms

①	②	③
200 mVp-p TP202 V-B	200 mVp-p TP203 V-G	200 mVp-p TP204 V-R

BB Board

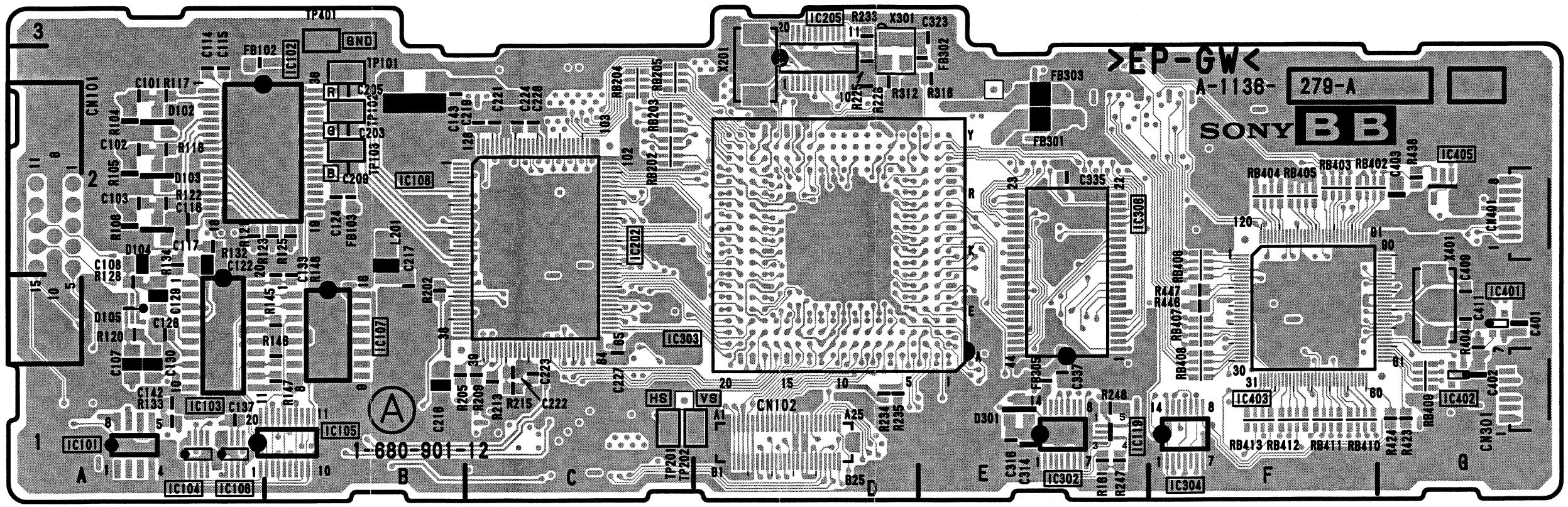

BB -A SIDE-
SUFFIX: -12

24LC21AT/SN (IC101)

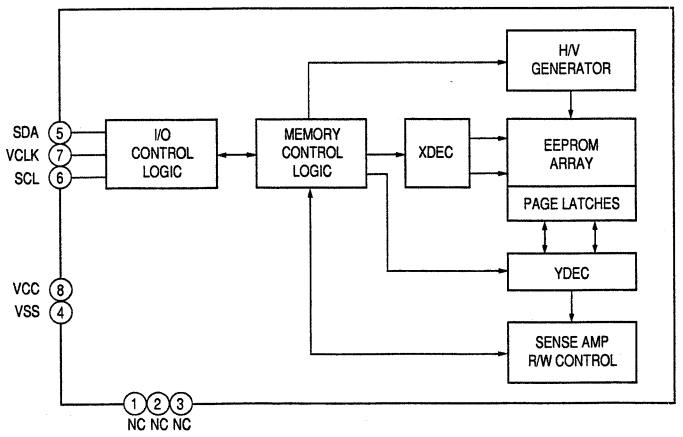

74VHC240MTCX (IC105)

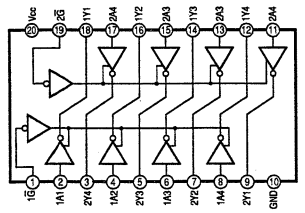

74VHC125MTCX (IC203, 304)

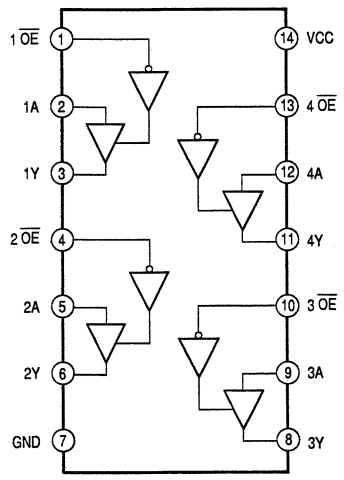

CXA1875AM (IC107)

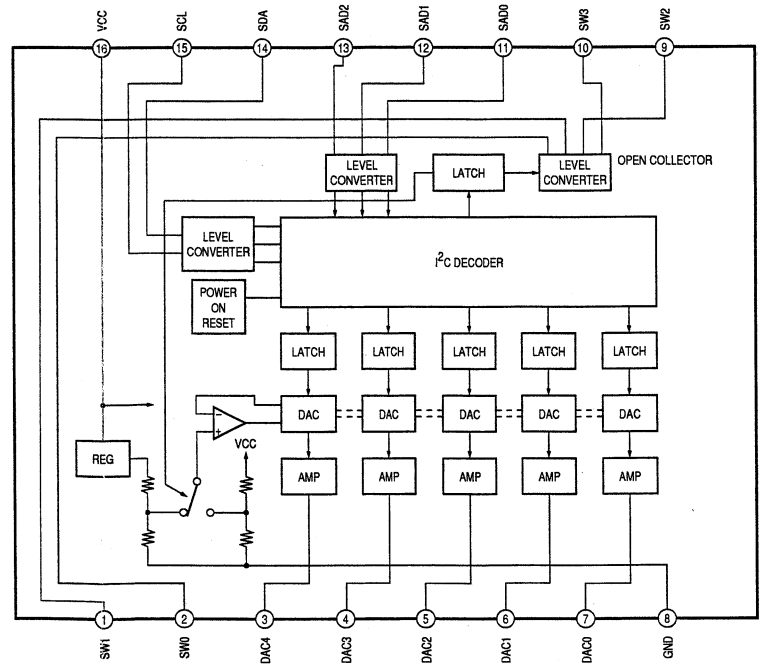

LP2985IM5X-3.3 (IC201, 404)

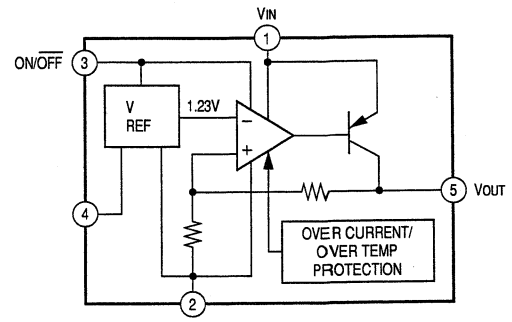

BB Board

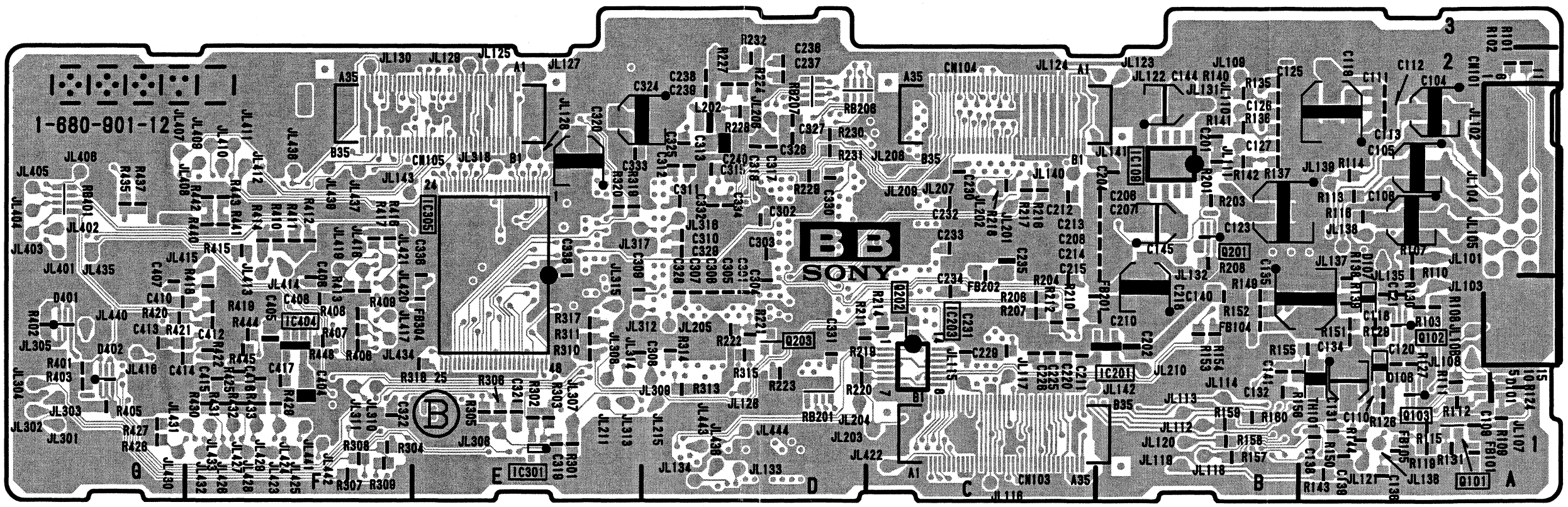

IC101	A-1
IC102	B-2
IC103	A-1
IC104	A-1
IC105	B-1
IC106	A-1
IC107	B-1
IC108	B-2
IC109	*B-2
IC201	*B-1
IC202	C-2
IC203	*C-1
IC205	D-3
IC301	*E-1
IC302	E-1
IC303	D-1
IC304	F-1
IC305	*E-2
IC306	E-2
IC401	G-1
IC402	G-1
IC403	F-1
IC404	*F-1
IC405	G-2
Q101	*A-1
Q102	*A-1
Q103	*A-1
Q201	*B-2
Q202	*C-1
Q203	*D-1
D101	*A-1
D102	A-2
D103	A-2
D104	A-2
D105	A-1
D106	*A-1
D107	*A-2
D301	E-1
D401	*G-1
D402	*G-1
TP101	B-2
TP102	B-2
TP103	B-2
TP201	C-1
TP202	C-1
TP401	B-3

*:B Side mount

BB -B SIDE-
SUFFIX: -12

M52758FP (IC102)

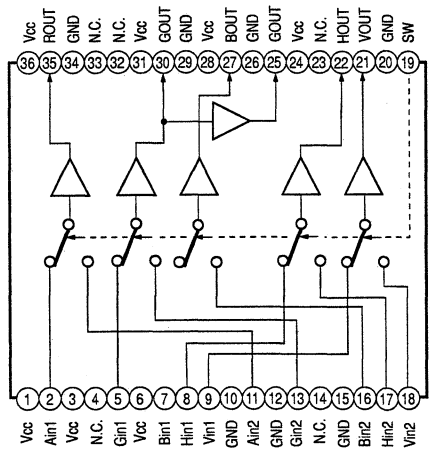

M52347FP-TE (IC103)

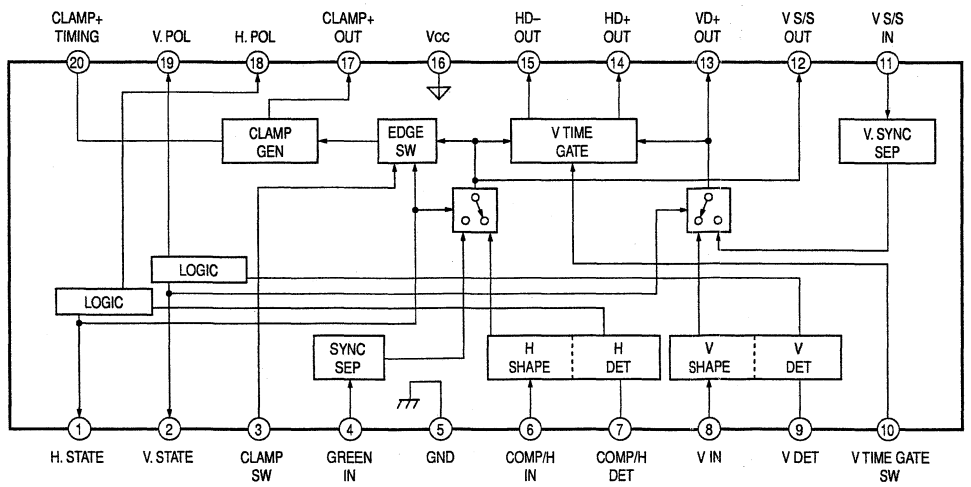

BB Board Waveforms

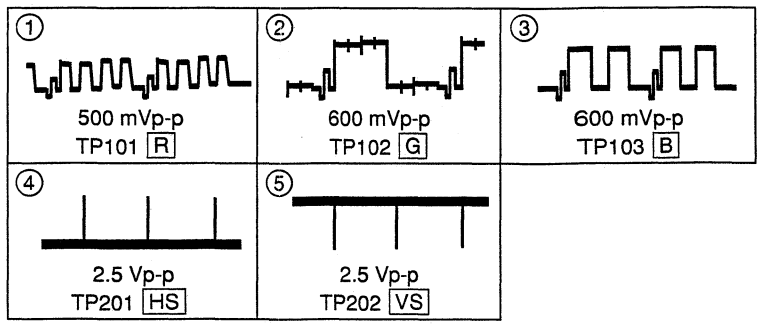

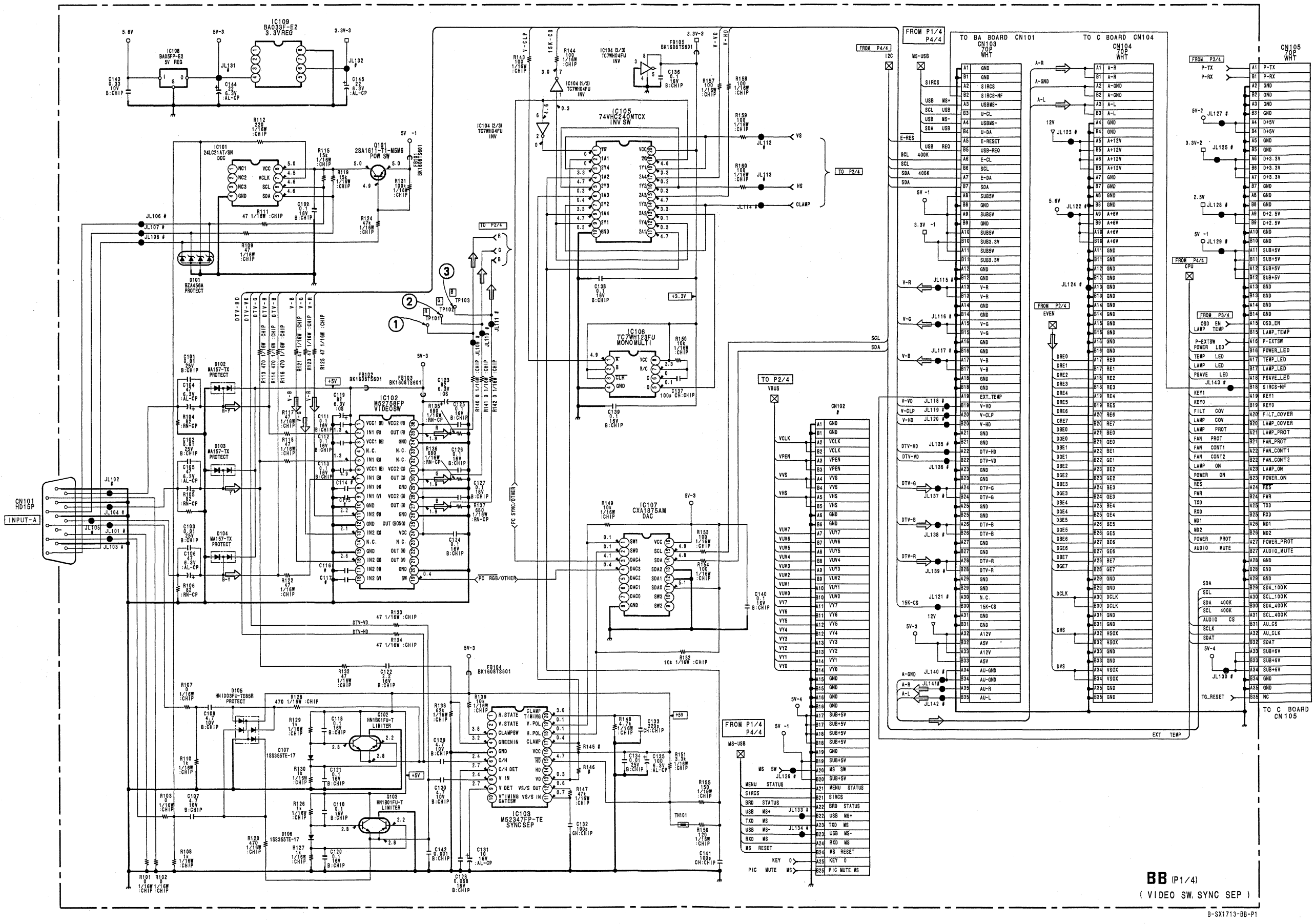

6-10 6-10

VPL-CS4/CX4

NOTE : *

REF. NO \ MODEL	VPL-CS4	VPL-CX4
IC202	AD9884AKS-100	AD9884AKS-140
X201	13.08384 MHz	16.9344 MHz
R231	100 1/16W :CHIP	22 1/16W :CHIP

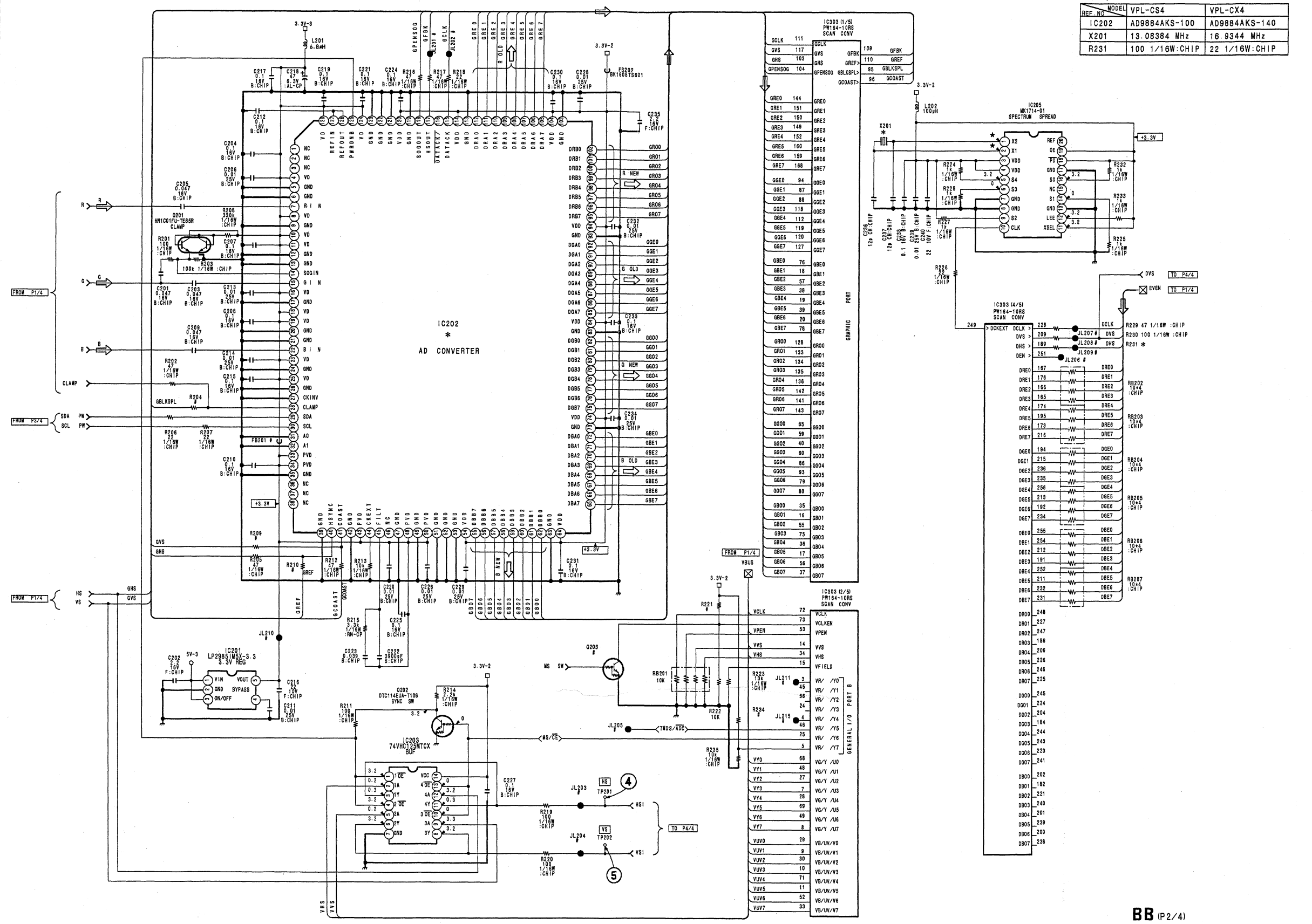

BB (P2/4)
(AD CONVERTER, SCAN CONVERTER)

B-SX1713-BB-P2

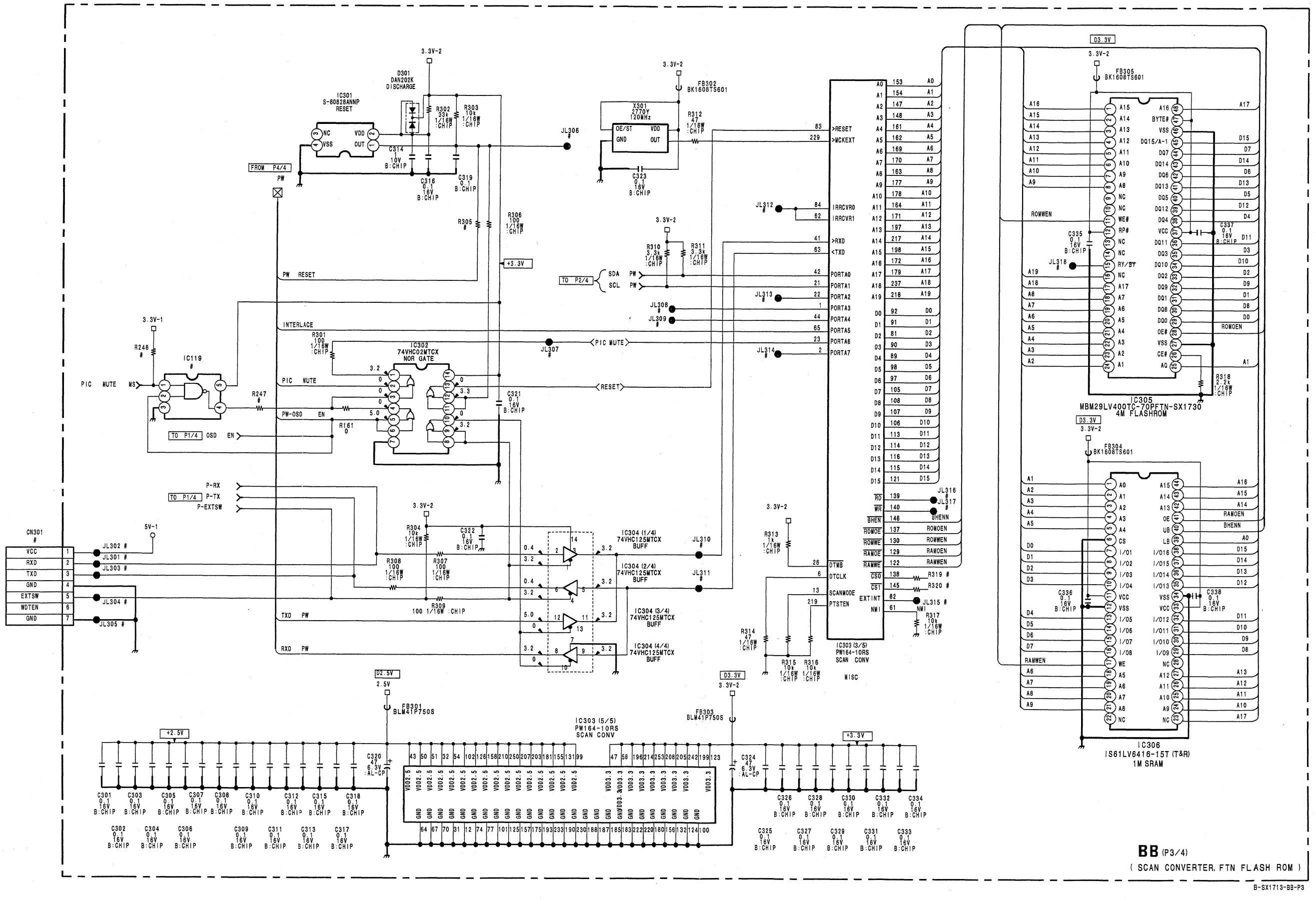
IC301
S-80828ANNP
RESET
D301
DAN202K
DISCHARGE
FROM P4/4
PW
PW RESET
INTERLACE
PIC MUTE
PW-OSD EN
OSD EN
TO P1/4
IC119
IC302
74VHC02MTCX
NOR GATE
X301
2770Y
120MHz
FB302
BK1608TS601
TO P2/4
SDA PW
SCL PW
IC304 (1/4)
74VHC125MTCX
BUFF
IC304 (2/4)
74VHC125MTCX
BUFF
IC304 (3/4)
74VHC125MTCX
BUFF
IC304 (4/4)
74VHC125MTCX
BUFF
CN301
VCC
RXD
TXD
GND
EXTSW
WDTEN
GND
IC303 (3/5)
PW164-10RS
SCAN CONV
MISC
IC303 (5/5)
PW164-10RS
SCAN CONV
FB301
BLM41P750S
FB303
BLM41P750S
FB305
BK1608TS601
IC305
MBM29LV400TC-70PFTN-SX1730
4M FLASHROM
FB304
BK1608TS601
IC306
IS61LV6416-15T (T&R)
1M SRAM
ROMWEN
ROMOEN
RAMWEN
RAMOEN
BHENN
BB (P3/4)
(SCAN CONVERTER, FTN FLASH ROM)
B-SX1713-BB-P3

BB (4/4)

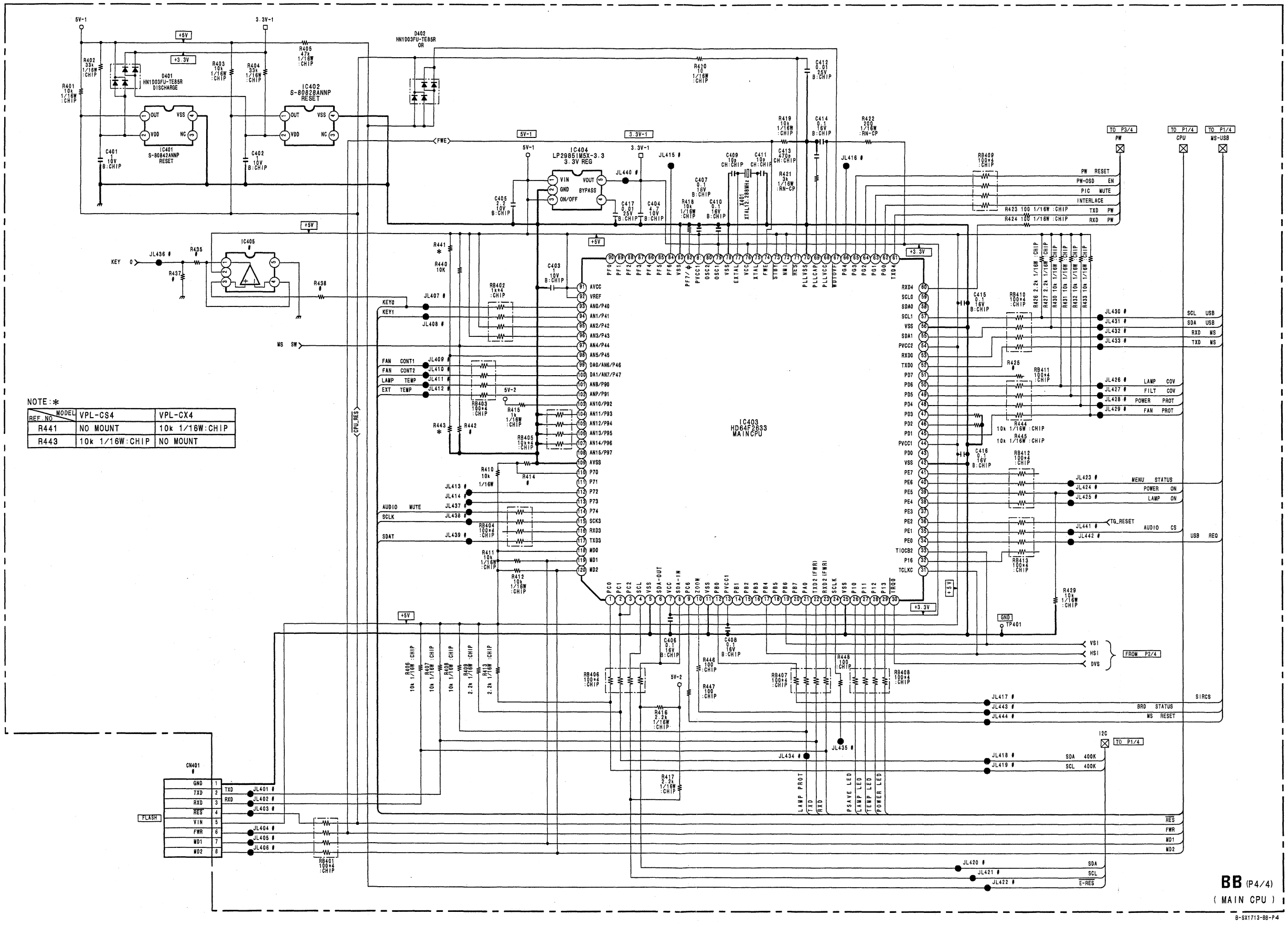

NOTE:*

REF NO \ MODEL	VPL-CS4	VPL-CX4
R441	NO MOUNT	10k 1/16W:CHIP
R443	10k 1/16W:CHIP	NO MOUNT

C Board

Serial No.10,001 to 5,000,000 ;for VPL-CS4
Serial No.10,001 to 5,000,000 ;for VPL-CX4

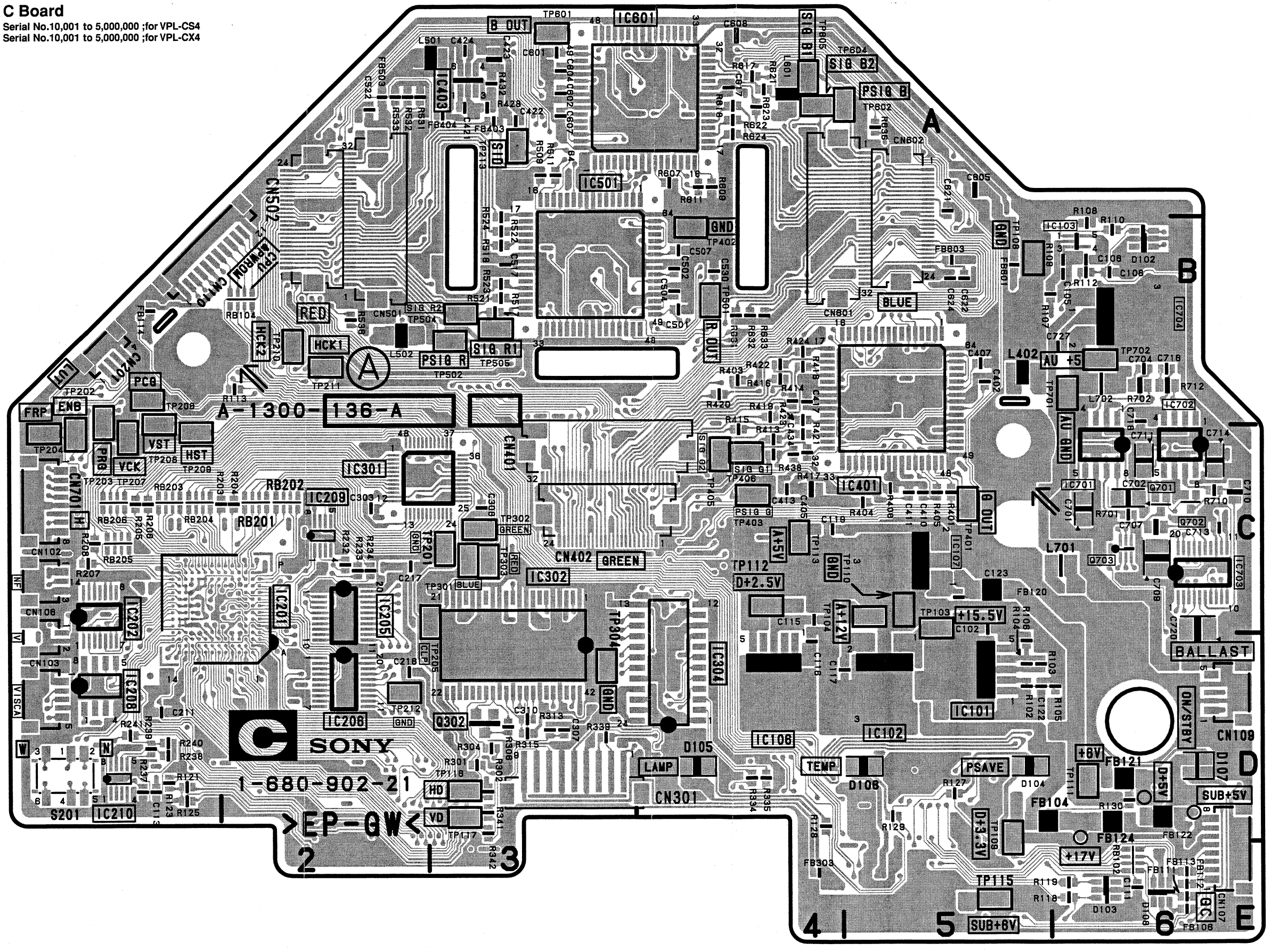

C -A SIDE-
SUFFIX: -21

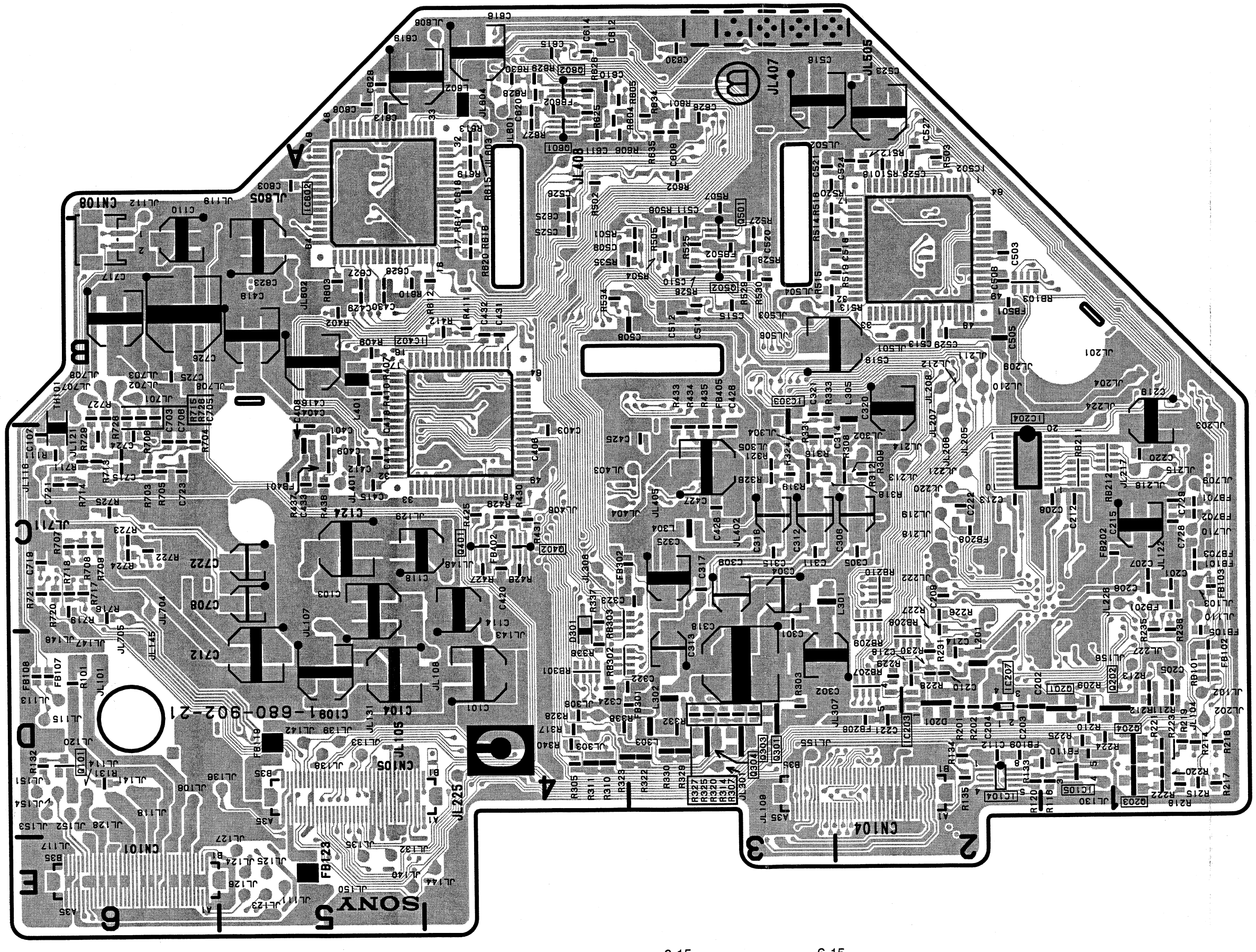

C Board

IC101	D-5	D102	B-6
IC102	D-5	D103	E-6
IC103	B-6	D104	D-5
IC104	*D-2	D105	D-4
IC105	*D-1	D106	D-5
IC106	D-4	D107	D-6
IC107	C-5	D108	E-6
IC201	C-2	D201	*D-2
IC202	C-1	D301	*D-4
IC203	*D-2		
IC204	*B-2	TP103	C-5
IC205	C-2	TP104	C-4
IC206	D-2	TP108	B-5
IC207	*D-2	TP109	D-5
IC208	D-1	TP110	C-5
IC209	C-2	TP111	D-6
IC210	D-1	TP112	C-4
IC301	C-2	TP113	C-4
IC302	C-3	TP115	E-5
IC303	*B-3	TP116	D-3
IC304	D-4	TP117	D-3
IC401	C-5	TP201	C-3
IC402	*B-5	TP202	B-1
IC403	A-3	TP203	C-1
IC501	A-3	TP204	C-1
IC502	*A-2	TP205	D-3
IC601	A-4	TP206	B-1
IC602	*A-5	TP207	C-1
IC701	C-6	TP208	C-1
IC702	B-6	TP209	C-1
IC703	C-6	TP210	B-2
IC704	B-6	TP211	B-2
		TP212	D-2
Q101	*D-6	TP213	A-3
Q201	*D-1	TP301	C-3
Q202	*D-1	TP302	C-3
Q203	*D-1	TP303	C-3
Q204	*D-1	TP304	D-3
Q301	*D-3	TP401	C-5
Q302	D-3	TP402	B-4
Q303	*D-3	TP403	C-4
Q304	*D-3	TP405	C-4
Q401	*C-4	TP406	C-4
Q402	*C-4	TP501	B-4
Q501	*A-3	TP502	B-3
Q502	*B-3	TP504	B-3
Q601	*A-4	TP505	B-3
Q602	*A-4	TP601	A-3
Q701	C-6	TP602	A-5
Q702	C-6	TP604	A-5
Q703	C-6	TP605	A-4
		TP701	B-6
		TP702	B-6

*:B Side mount

C -B SIDE-
SUFFIX: -21

C Board

Serial No.5,000,001 and later ;for VPL-CS4
Serial No.5,000,001 and later ;for VPL-CX4

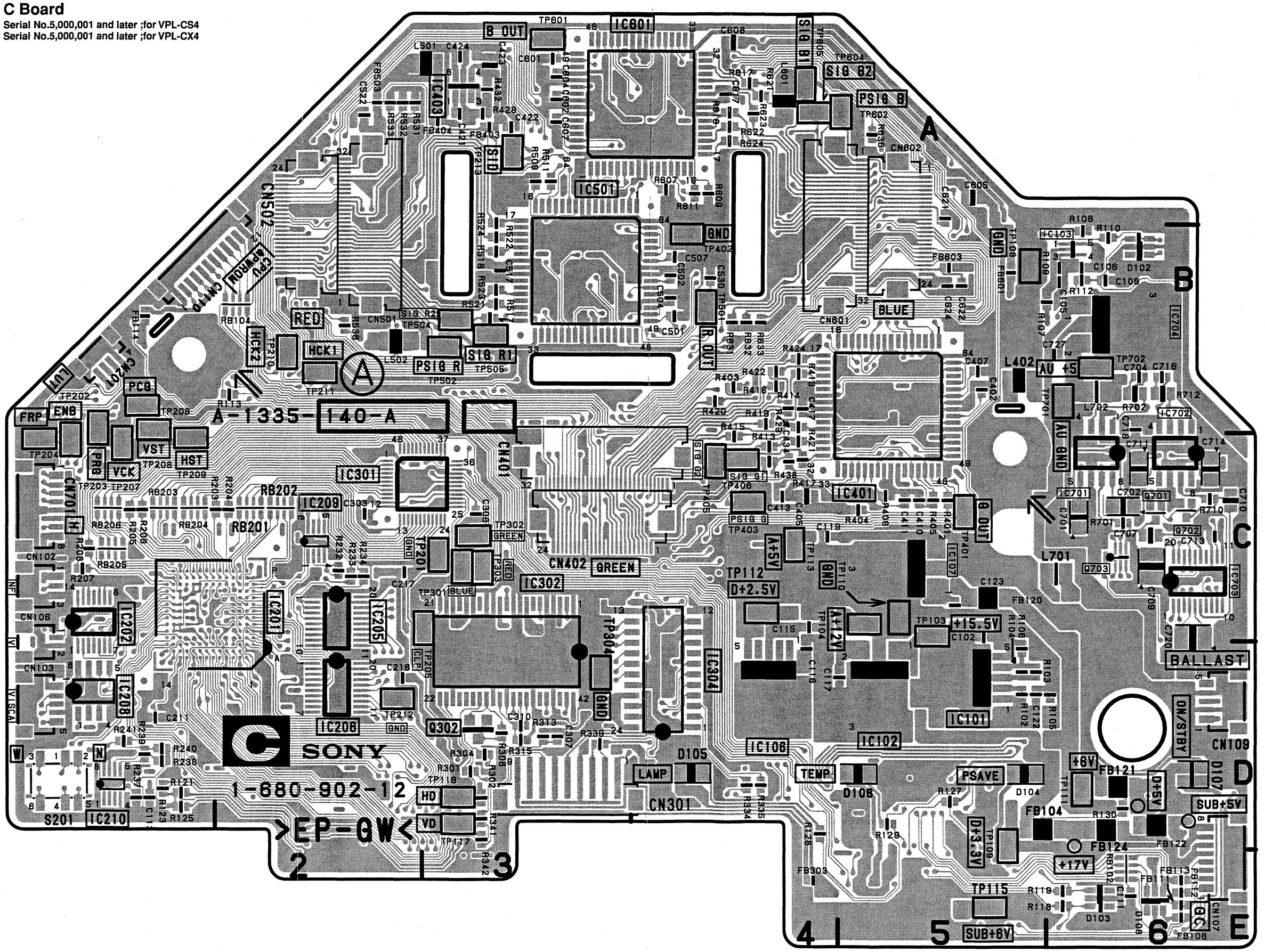

C -A SIDE-
SUFFIX: -12

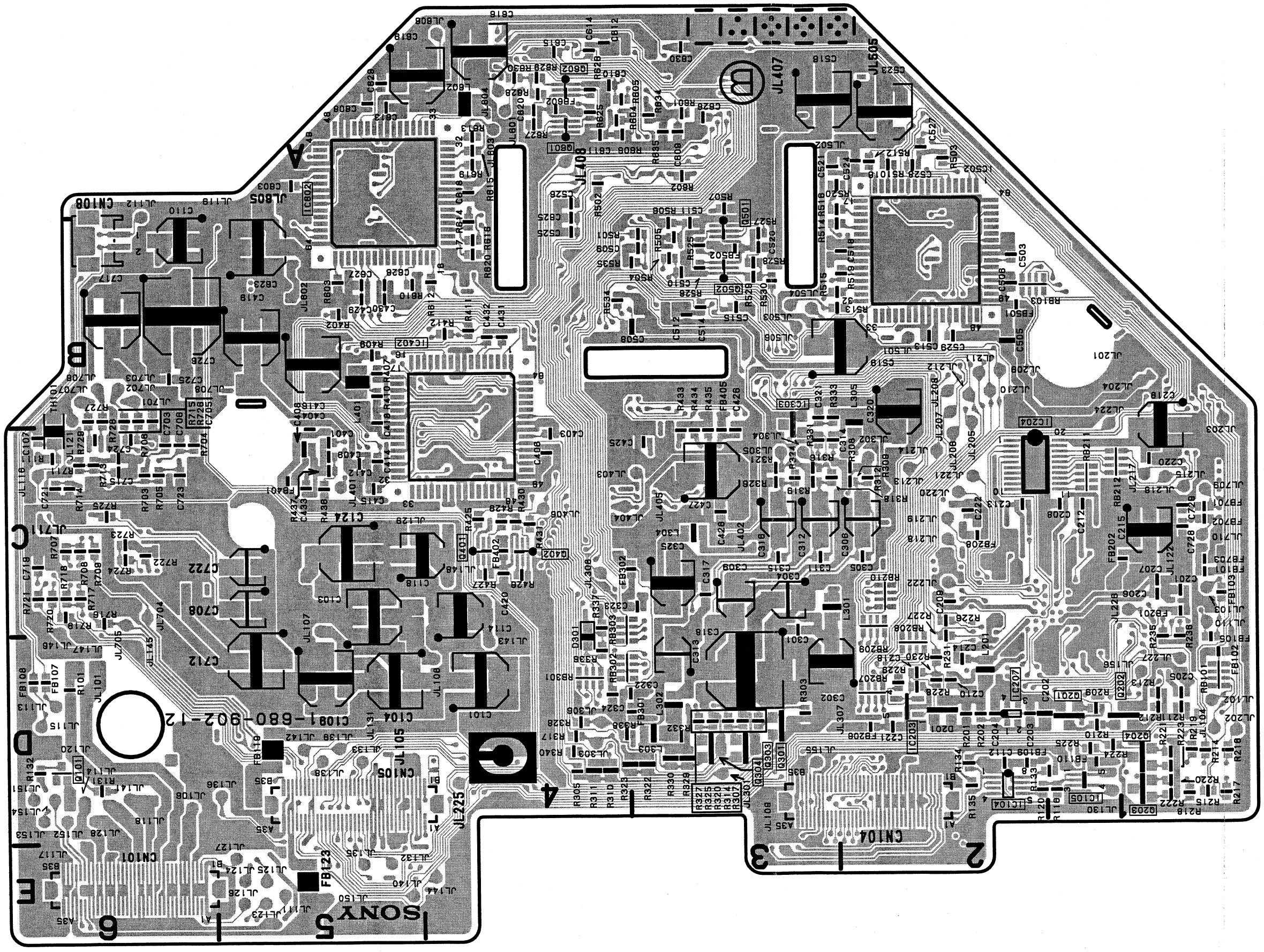

C Board

D102	B-6	Q401	*C-4
D103	E-6	Q402	*C-4
D104	D-5	Q501	*B-3
D105	D-4	Q502	*B-3
D106	D-5	Q601	*A-4
D107	D-6	Q602	*A-4
D108	E-6	Q701	C-6
D201	*D-2	Q702	C-6
D301	*D-4	Q703	C-6
IC101	D-5	TP103	C-5
IC102	D-5	TP104	C-4
IC103	B-6	TP108	B-5
IC104	*D-2	TP109	D-5
IC105	*D-1	TP110	C-5
IC106	D-4	TP111	D-6
IC107	C-5	TP112	C-4
IC201	C-2	TP113	C-4
IC202	C-1	TP115	E-5
IC203	*D-2	TP116	C-3
IC204	*C-2	TP117	C-3
IC205	C-2	TP201	C-3
IC206	D-2	TP202	B-1
IC207	*D-2	TP203	C-1
IC208	D-1	TP204	C-1
IC209	C-2	TP205	D-3
IC210	D-1	TP206	B-1
IC301	C-2	TP207	C-1
IC302	C-3	TP208	C-1
IC303	*B-3	TP209	C-1
IC304	D-4	TP210	B-2
IC401	C-5	TP211	B-2
IC402	*B-4	TP212	D-2
IC403	A-3	TP213	A-3
IC501	B-3	TP301	C-3
IC502	*B-2	TP302	C-3
IC601	A-3	TP303	C-3
IC602	*A-5	TP304	C-3
IC701	C-6	TP401	C-5
IC702	B-6	TP402	B-4
IC703	C-6	TP403	C-4
IC704	B-6	TP405	C-4
		TP406	C-4
Q101	*D-6	TP501	B-4
Q201	*D-1	TP502	B-3
Q202	*D-1	TP504	B-3
Q203	*D-1	TP505	B-3
Q204	*D-1	TP601	A-3
Q301	*D-3	TP602	A-5
Q302	D-3	TP604	A-5
Q303	*D-3	TP605	A-4
Q304	*D-3	TP701	B-6
		TP702	B-6

* B Side mount

C -B SIDE-
SUFFIX: -12

CXA3512R-T6 (IC401, 501, 601 : VPL-CS4)
(IC401, 402, 501, 502, 601, 602 : VPL-CX4)

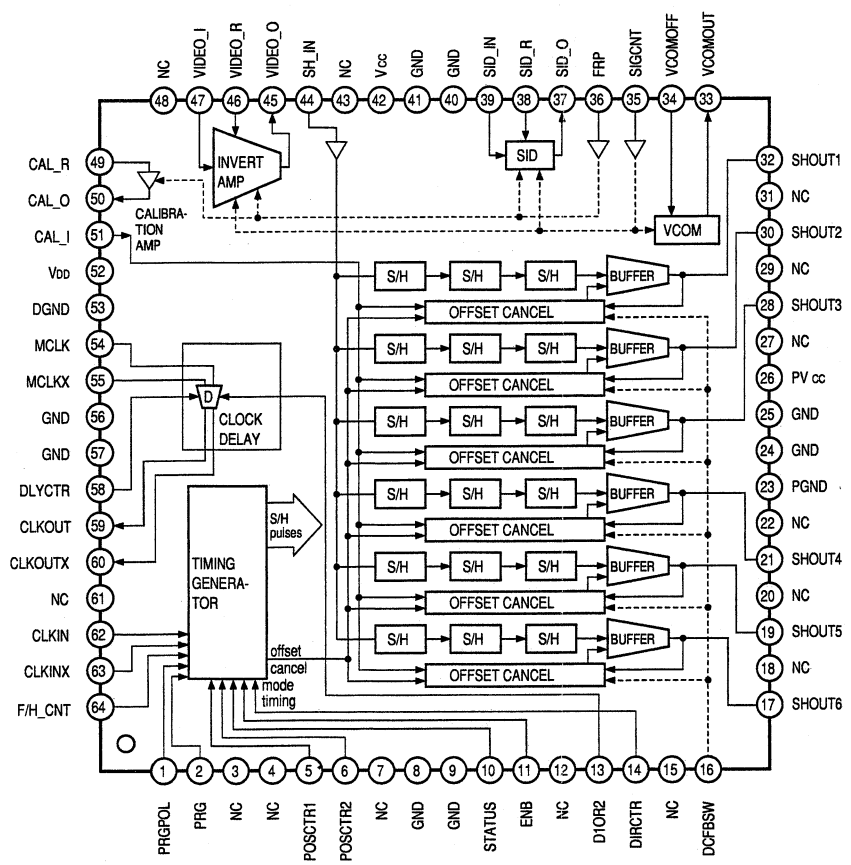

M52749FP (IC302)

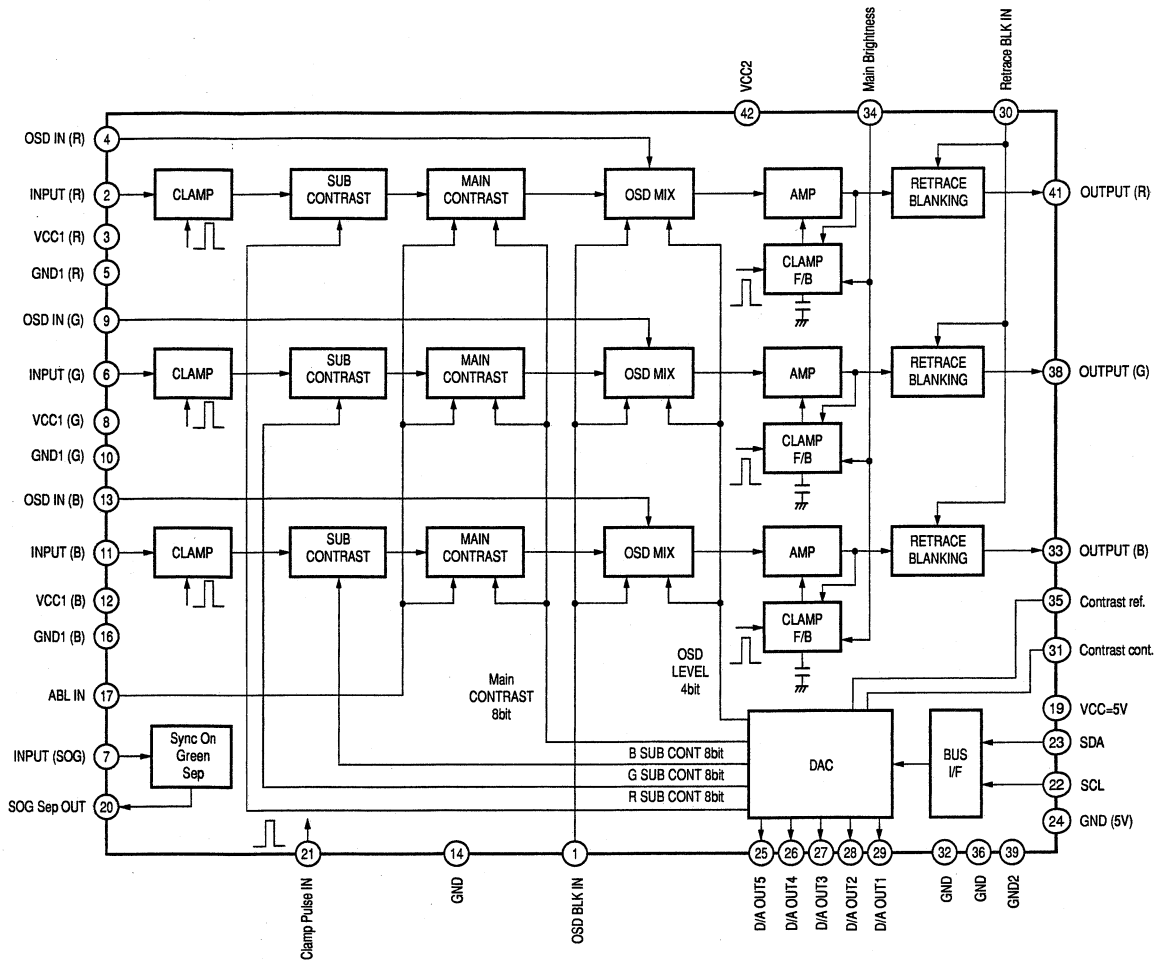

CXA1846BN-T4 (IC703)

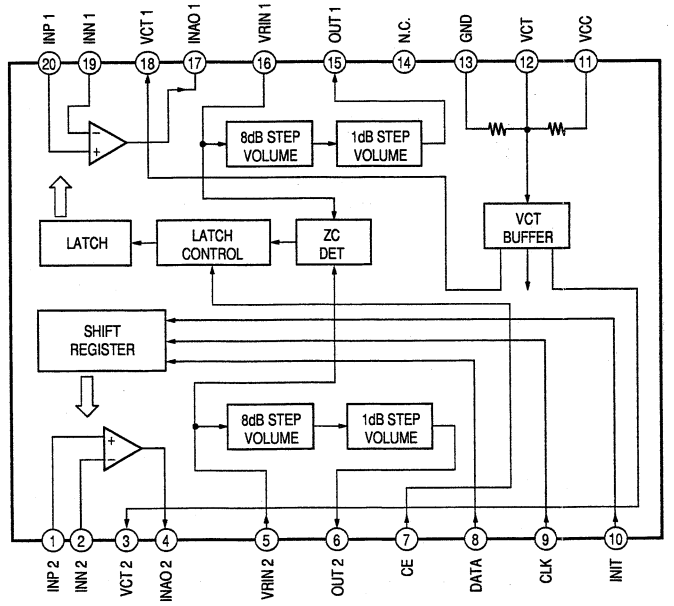

NJM2073M (TE2) (IC701, 702)

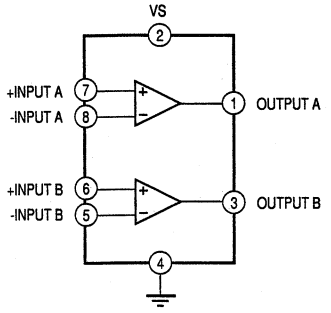

C Board Waveforms

① 3.0 Vp-p TP116 HD	② 3.0 Vp-p TP117 VD	③ 400 mVp-p TP301 BLUE	④ 400 mVp-p TP303 RED
⑤ 400 mVp-p TP302 GREEN	⑥ 1 Vp-p TP401 G OUT	⑦ 7.5 Vp-p TP405 SIG G2	⑧ 7.5 Vp-p TP406 SIG G1
⑨ 7.5 Vp-p TP403 PSIG G	⑩ 1 Vp-p TP501 R OUT	⑪ 7.5 Vp-p TP505 SIG R1	⑫ 7.5 Vp-p TP504 SIG R2
⑬ 7.5 Vp-p TP502 PSIG R	⑭ 1 Vp-p TP601 B OUT	⑮ 7.5 Vp-p TP605 SIG B1	⑯ 7.5 Vp-p TP604 SIG B2
			⑰ 7.5 Vp-p TP602 PSIG B

6-18

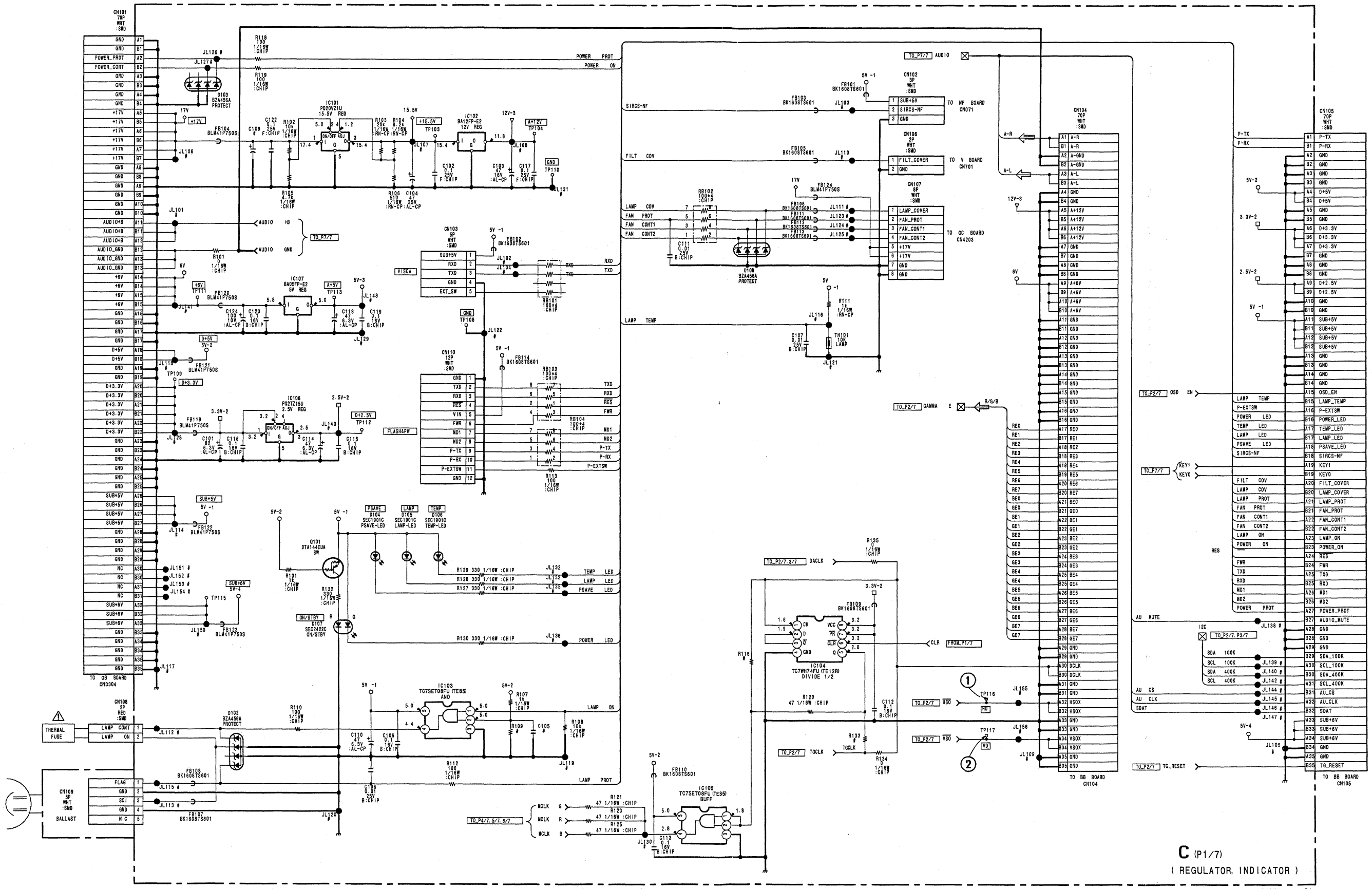

C (P1/7)
(REGULATOR, INDICATOR)

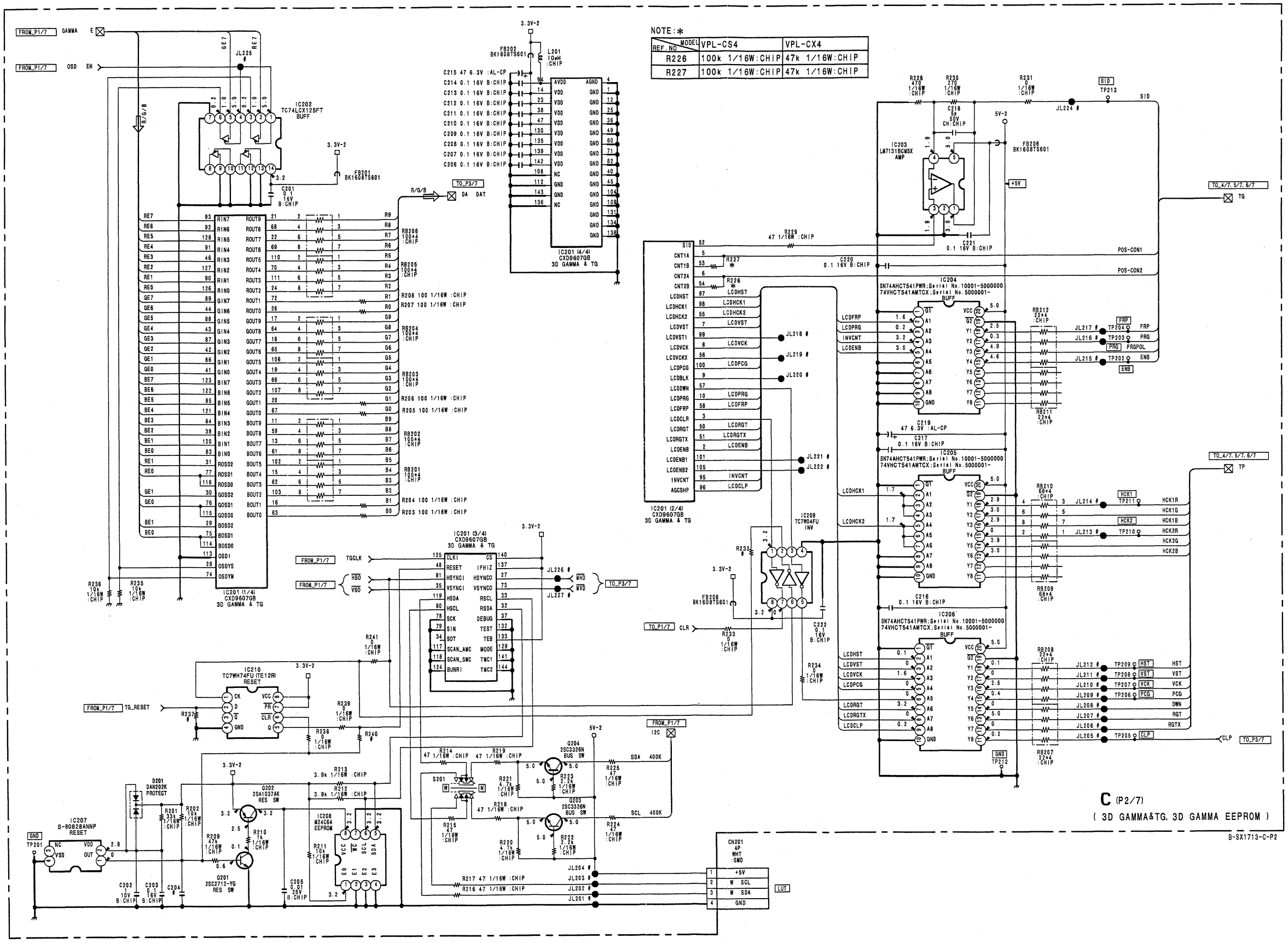
NOTE:*
REF. NO / MODEL | VPL-CS4 | VPL-CX4
R226 | 100k 1/16W:CHIP | 47k 1/16W:CHIP
R227 | 100k 1/16W:CHIP | 47k 1/16W:CHIP
FROM_P1/7 GAMMA E
FROM_P1/7 OSD EN
R/G/B
IC202 TC74LCX125FT BUFF
IC201 (1/4) CX09607GB 3D GAMMA & TG
IC201 (2/4) CX09607GB 3D GAMMA & TG
IC201 (3/4) CX09607GB 3D GAMMA & TG
IC201 (4/4) CX09607GB 3D GAMMA & TG
FB202 BK1608TS601
FB201 BK1608TS601
L201 10uH :CHIP
TO_P3/7
IC210 TC7WH74FU (TE12R) RESET
IC207 S-80828ANNP RESET
IC208 M24C64 EEPROM
IC209 TC7W04FU INV
Q201 2SC2712-YG RES SW
Q202 2SA1037AK RES SW
Q203 2SC3326N BUS SW
Q204 2SC3326N BUS SW
D201 DAN202K PROTECT
S201
CN201 4P WHT :SMD
LUT
IC203 LM7131BCM5X AMP
FB206 BK1608TS601
FB208 BK1608TS601
IC204 SN74AHCT541PWR:Serial No.10001-5000000 74VHCT541AMTCX:Serial No.5000001- BUFF
IC205 SN74AHCT541PWR:Serial No.10001-5000000 74VHCT541AMTCX:Serial No.5000001- BUFF
IC206 SN74AHCT541PWR:Serial No.10001-5000000 74VHCT541AMTCX:Serial No.5000001- BUFF
TO_4/7.5/7.8/7 TG
TO_4/7.5/7.8/7 TP
TO_P3/7
SID
POS-CON1
POS-CON2
FRP
PRG
PRGPOL
ENB
HCK1R
HCK1G
HCK1B
HCK2R
HCK2G
HCK2B
HST
VST
VCK
PCG
DWN
RGT
RGTX
CLP
SDA 400K
SCL 400K
C (P2/7)
(3D GAMMA&TG, 3D GAMMA EEPROM)
B-SX1713-C-P2

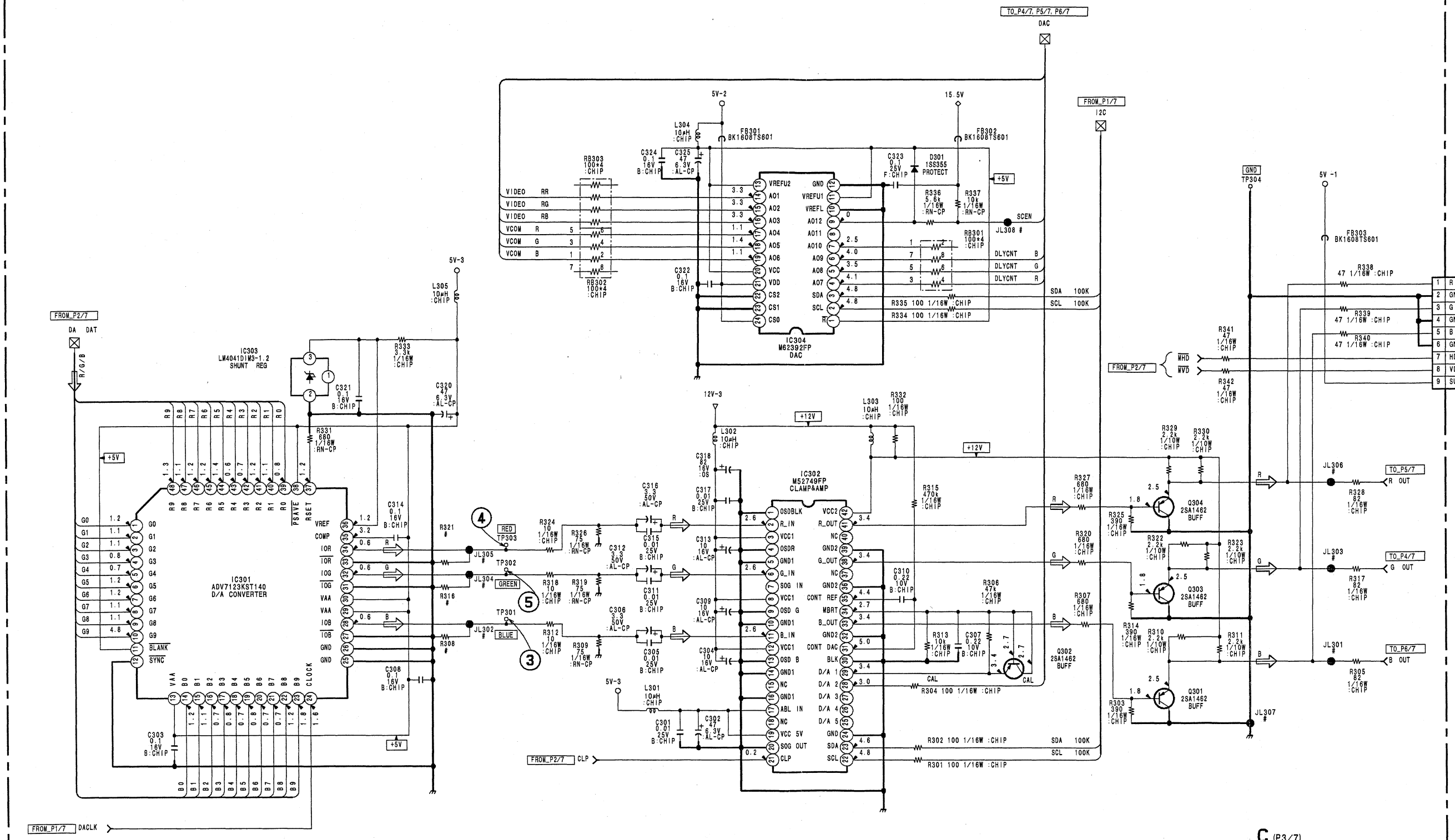

C (P3/7)
(D/A CONVERTER, DAC, CLAMP&AMP)

B-SX1713-C-P3

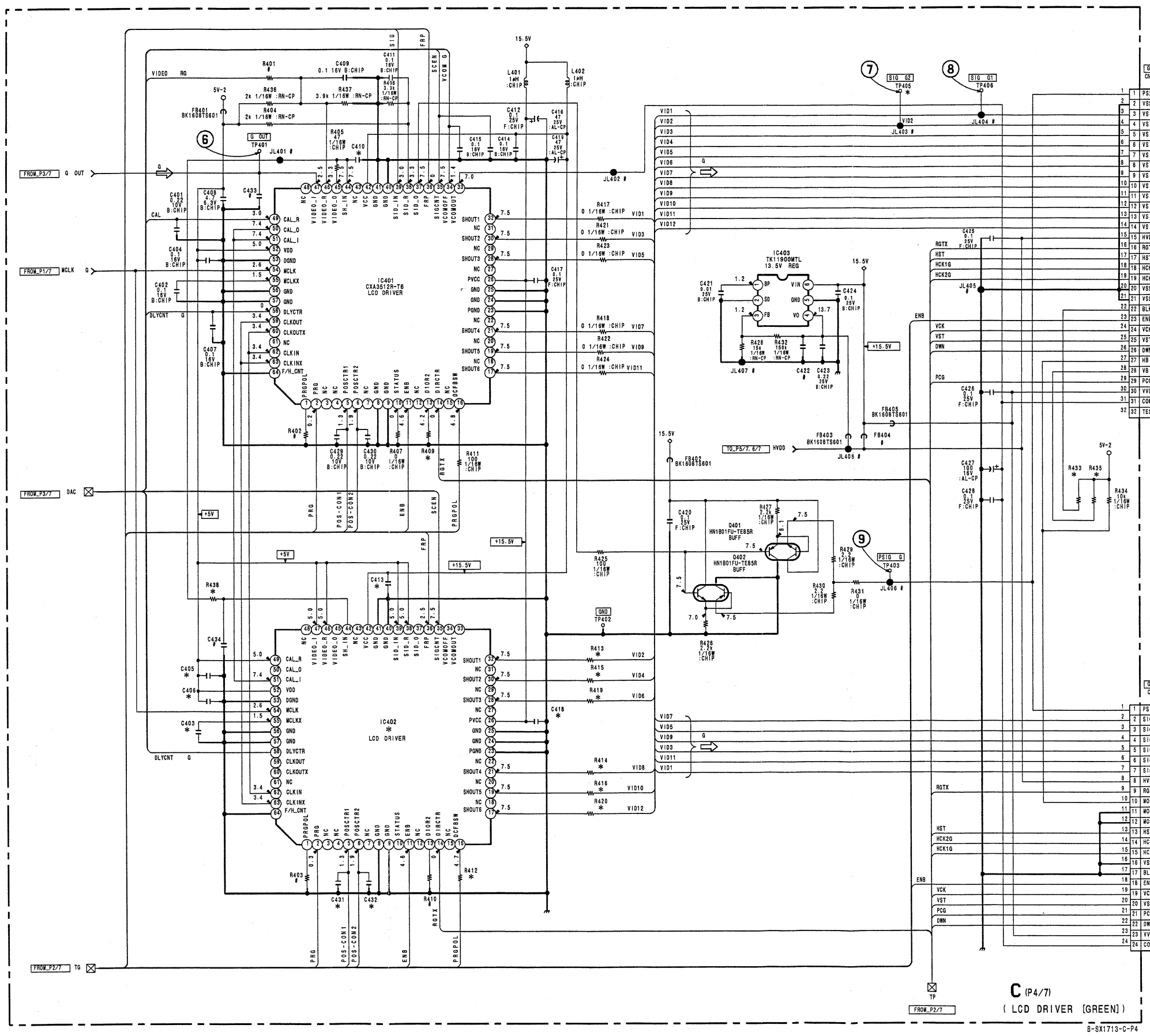

NOTE:*

REF NO \ MODEL	VPL-CS4	VPL-CX4
C403	NO MOUNT	0.1 16V B:CHIP
C405	NO MOUNT	4.7 6.3V B:CHIP
C406	NO MOUNT	0.1 16V B:CHIP
C410	39P 50V CH:CHIP	33P 50V CH:CHIP
C413	NO MOUNT	0.1 25V F:CHIP
C418	NO MOUNT	0.1 25V F:CHIP
C431	NO MOUNT	0.22 10V B:CHIP
C432	NO MOUNT	0.22 10V B:CHIP
CN401	NO MOUNT	32P FPC:SMD
CN402	24P FPC:SMD	NO MOUNT
IC402	NO MOUNT	CXA3512R-T6 LCD DRIVER
R409	0 1/16W:CHIP	NO MOUNT
R412	NO MOUNT	100 1/16W :CHIP
R413	NO MOUNT	0 1/16W :CHIP
R414	NO MOUNT	0 1/16W :CHIP
R415	NO MOUNT	0 1/16W :CHIP
R416	NO MOUNT	0 1/16W :CHIP
R419	NO MOUNT	0 1/16W :CHIP
R420	NO MOUNT	0 1/16W :CHIP
R433	NO MOUNT	10k 1/16W :CHIP
R435	NO MOUNT	10k 1/16W :CHIP
R438	NO MOUNT	0 1/16W :CHIP
TP405	NO MOUNT	CHECKER, CHIP

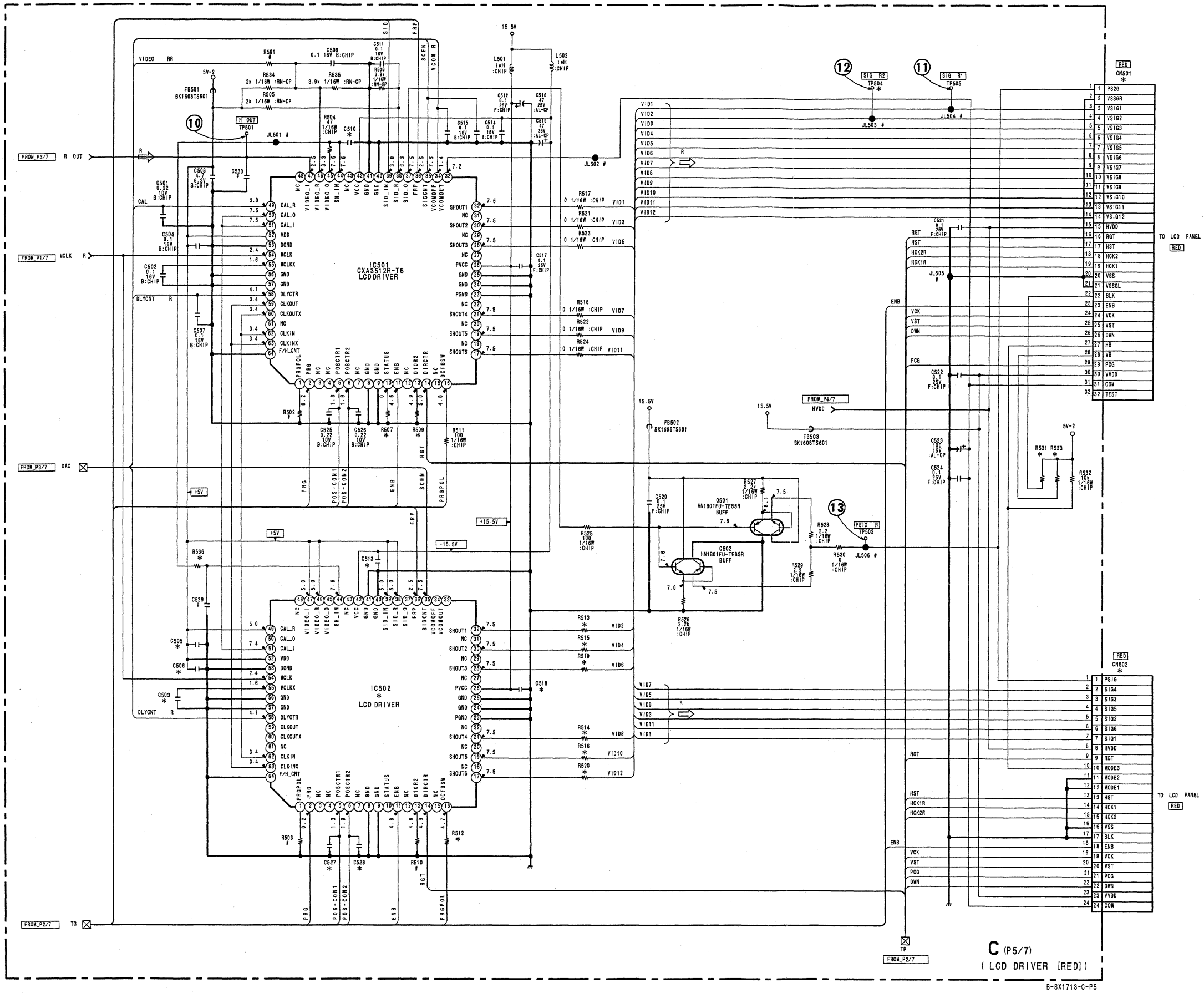

NOTE:*

REF. NO \ MODEL	VPL-CS4	VPL-CX4
C503	NO MOUNT	0.1 16V B:CHIP
C505	NO MOUNT	4.7 6.3V B:CHIP
C506	NO MOUNT	0.1 16V B:CHIP
C510	39P 50V CH:CHIP	33P 50V CH:CHIP
C513	NO MOUNT	0.1 25V F:CHIP
C518	NO MOUNT	0.1 25V F:CHIP
C527	NO MOUNT	0.22 10V B:CHIP
C528	NO MOUNT	0.22 10V B:CHIP
CN501	NO MOUNT	32P FPC:SMD
CN502	24P FPC:SMD	NO MOUNT
IC502	NO MOUNT	CXA3512R-T6 LCD DRIVER
R507	NO MOUNT	0 1/16W :CHIP
R509	0 1/16W:CHIP	NO MOUNT
R512	NO MOUNT	100 1/16W :CHIP
R513	NO MOUNT	0 1/16W :CHIP
R514	NO MOUNT	0 1/16W :CHIP
R515	NO MOUNT	0 1/16W :CHIP
R516	NO MOUNT	0 1/16W :CHIP
R519	NO MOUNT	0 1/16W :CHIP
R520	NO MOUNT	0 1/16W :CHIP
R531	NO MOUNT	10k 1/16W :CHIP
R533	NO MOUNT	10k 1/16W :CHIP
R536	NO MOUNT	0 1/16W :CHIP
TP504	NO MOUNT	CHECKER.CHIP

NOTE:*

REF NO \ MODEL	VPL-CS4	VPL-CX4
C603	NO MOUNT	0.1 16V B:CHIP
C605	NO MOUNT	4.7 6.3V B:CHIP
C606	NO MOUNT	0.1 16V B:CHIP
C610	39P 50V CH:CHIP	33P 50V CH:CHIP
C613	NO MOUNT	0.1 25V F:CHIP
C618	NO MOUNT	0.1 25V F:CHIP
C627	NO MOUNT	0.22 10V B:CHIP
C628	NO MOUNT	0.22 10V B:CHIP
CN601	NO MOUNT	32P FPC:SMD
CN602	24P FPC:SMD	NO MOUNT
IC602	NO MOUNT	CXA3512R-T6 LCD DRIVER
R607	NO MOUNT	0 1/16W :CHIP
R609	0 1/16W:CHIP	NO MOUNT
R612	NO MOUNT	100 1/16W :CHIP
R613	NO MOUNT	0 1/16W :CHIP
R614	NO MOUNT	0 1/16W :CHIP
R615	NO MOUNT	0 1/16W :CHIP
R616	NO MOUNT	0 1/16W :CHIP
R619	NO MOUNT	0 1/16W :CHIP
R620	NO MOUNT	0 1/16W :CHIP
R631	NO MOUNT	10k 1/16W :CHIP
R633	NO MOUNT	10k 1/16W :CHIP
R636	NO MOUNT	0 1/16W :CHIP
TP604	NO MOUNT	CHECKER. CHIP

C (P6/7)
(LCD DRIVER [BLUE])

B-SX1713-C-P6

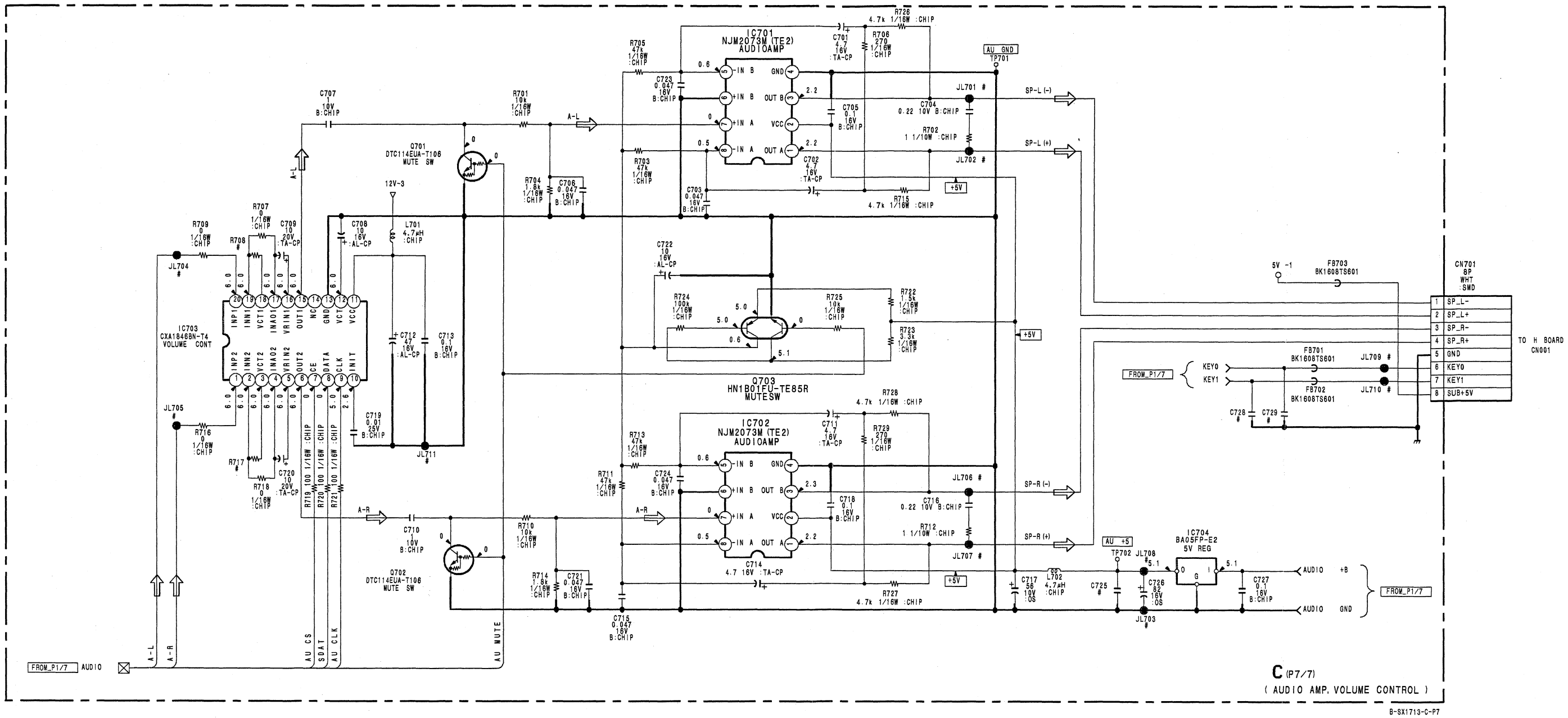

C (P7/7)
(AUDIO AMP, VOLUME CONTROL)

B-SX1713-C-P7

F Board

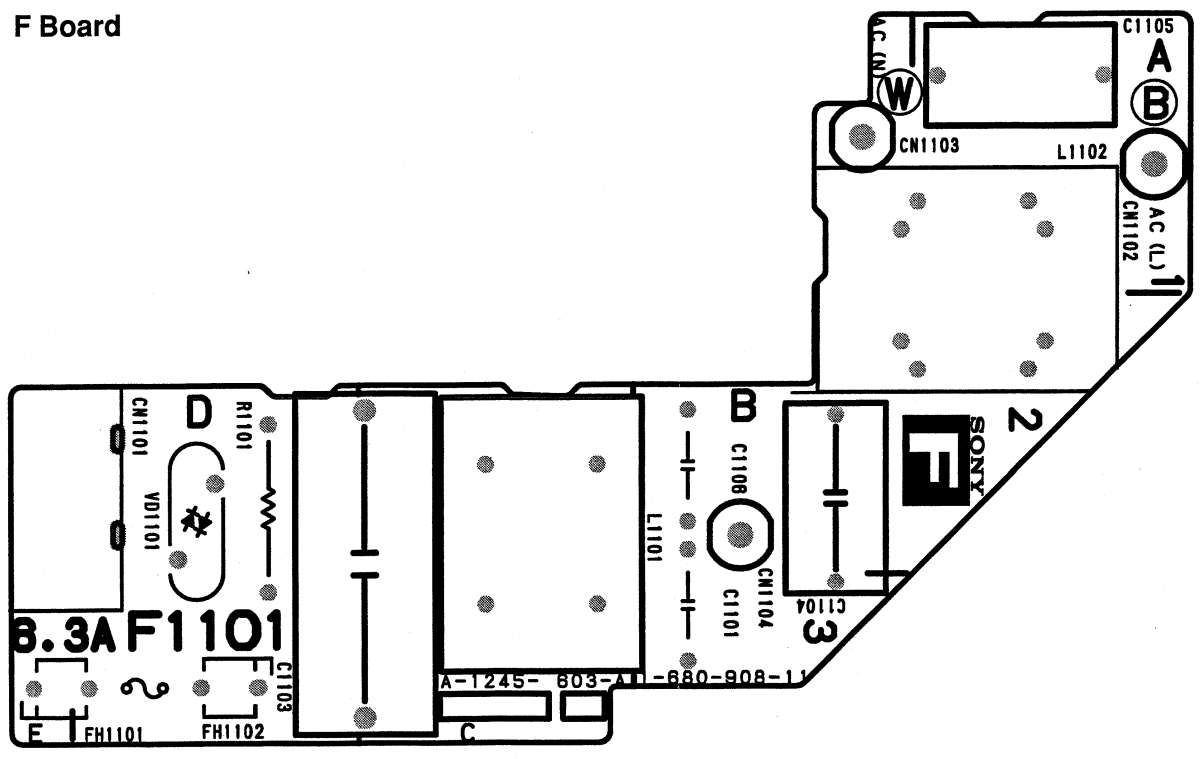

F -A SIDE-
SUFFIX: -11

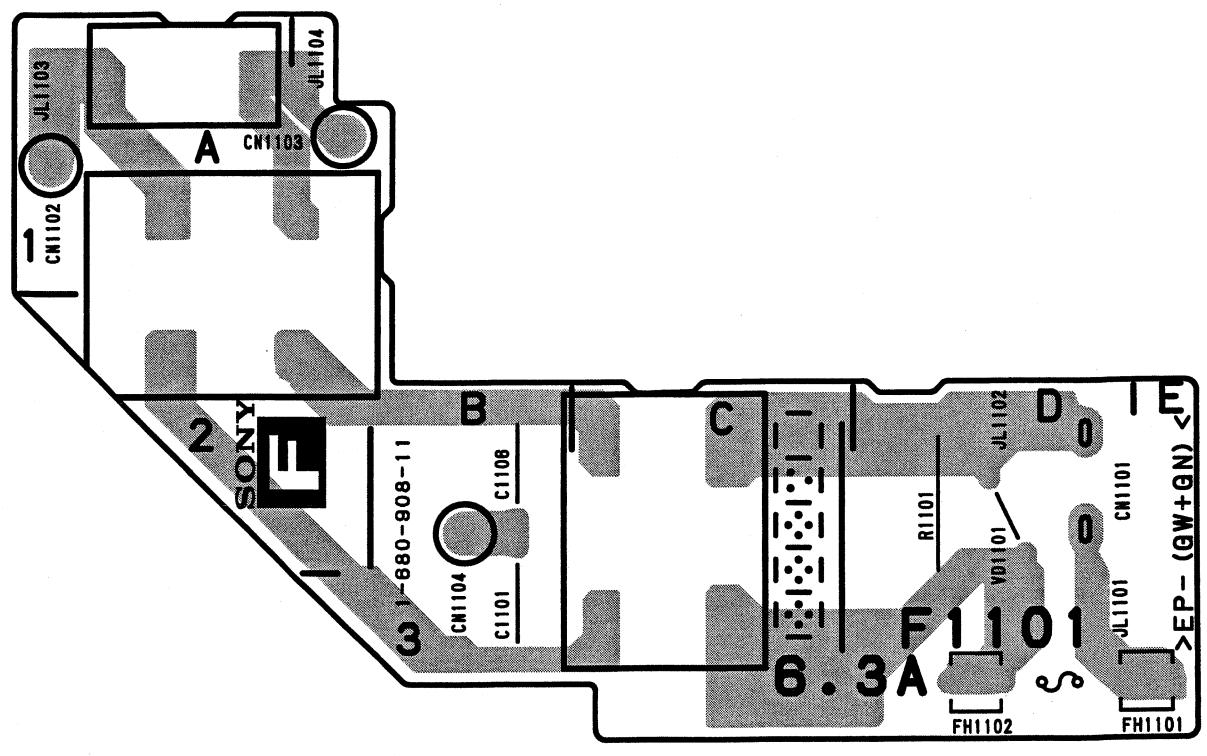

F -B SIDE-
SUFFIX: -11

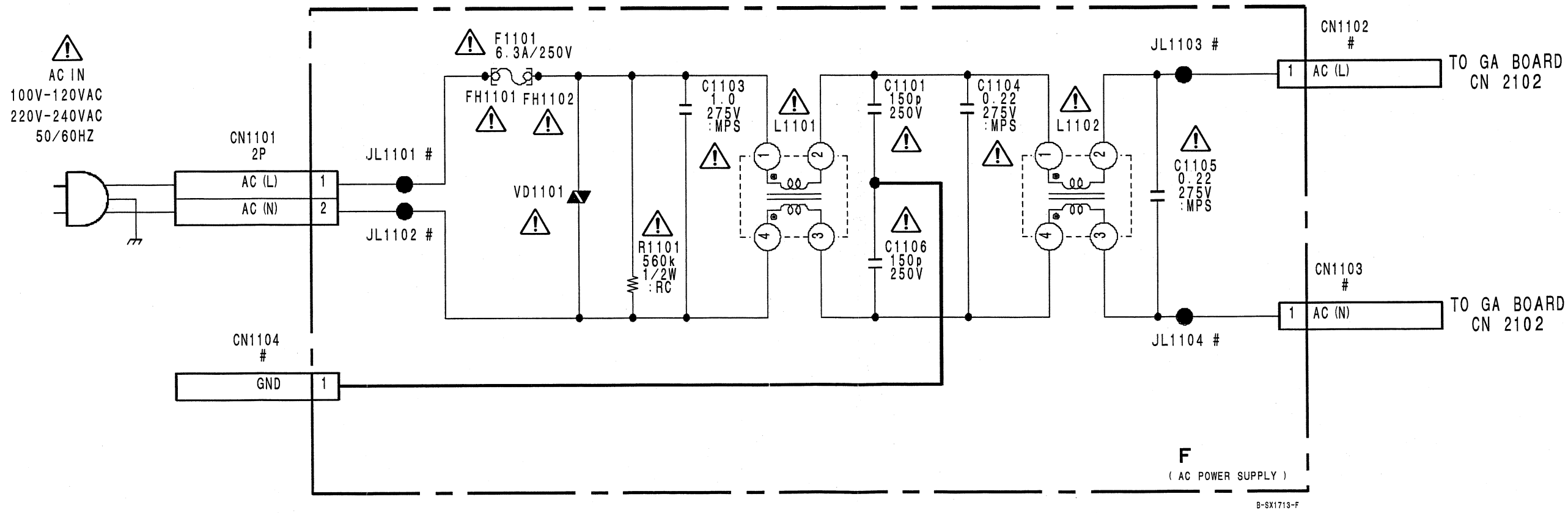

GA Board

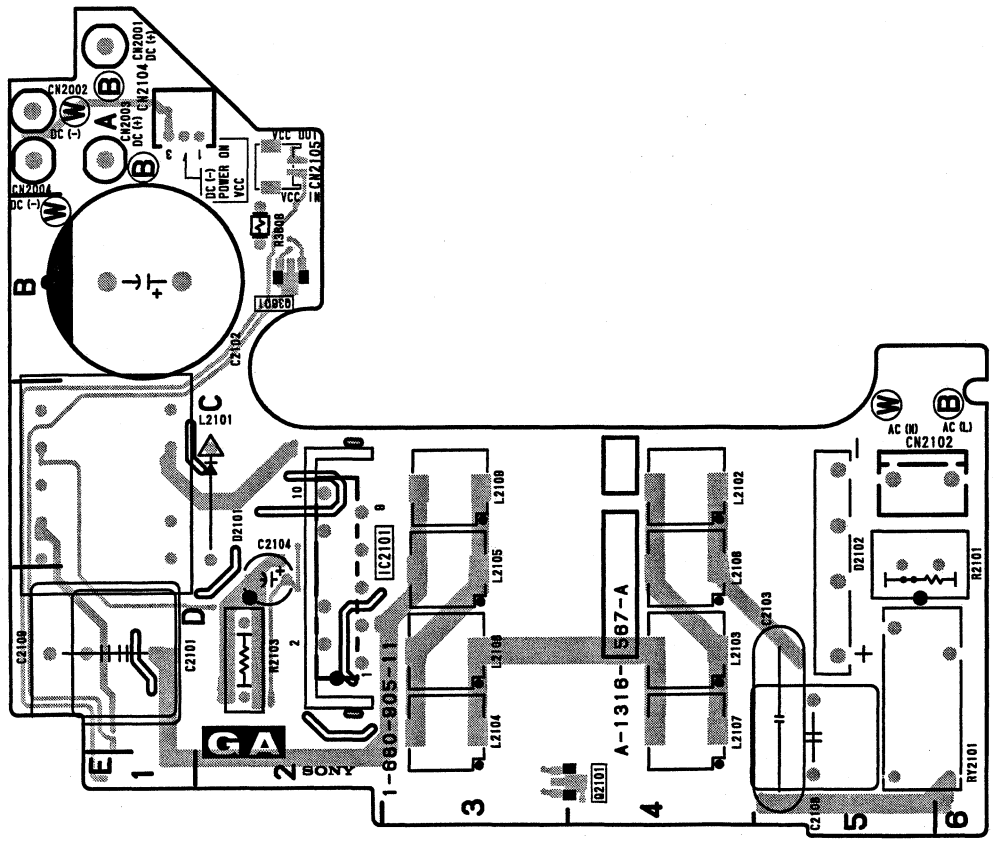
CN2002
CN2004
CN2001
CN2104
CN2105
CN2102
L2101
D2101
D2102
D2103
D2104
D2105
C2101
C2102
C2103
C2104
C2105
C2106
C2107
C2108
C2109
L2102
L2103
L2104
L2105
L2106
L2107
L2108
L2109
R2101
R2102
R2103
R2104
R2105
R2106
R2107
R2108
R2109
R2110
R2111
R2112
R2113
R2114
R2115
R2116
R2117
R2118
R2119
R2120
R2121
R2122
R2123
R2124
R2125
R2126
R2127
R2128
R2129
R2130
R2131
R2132
R2133
R2134
R2135
R2136
R2137
R2138
R2139
R2140

GB Board

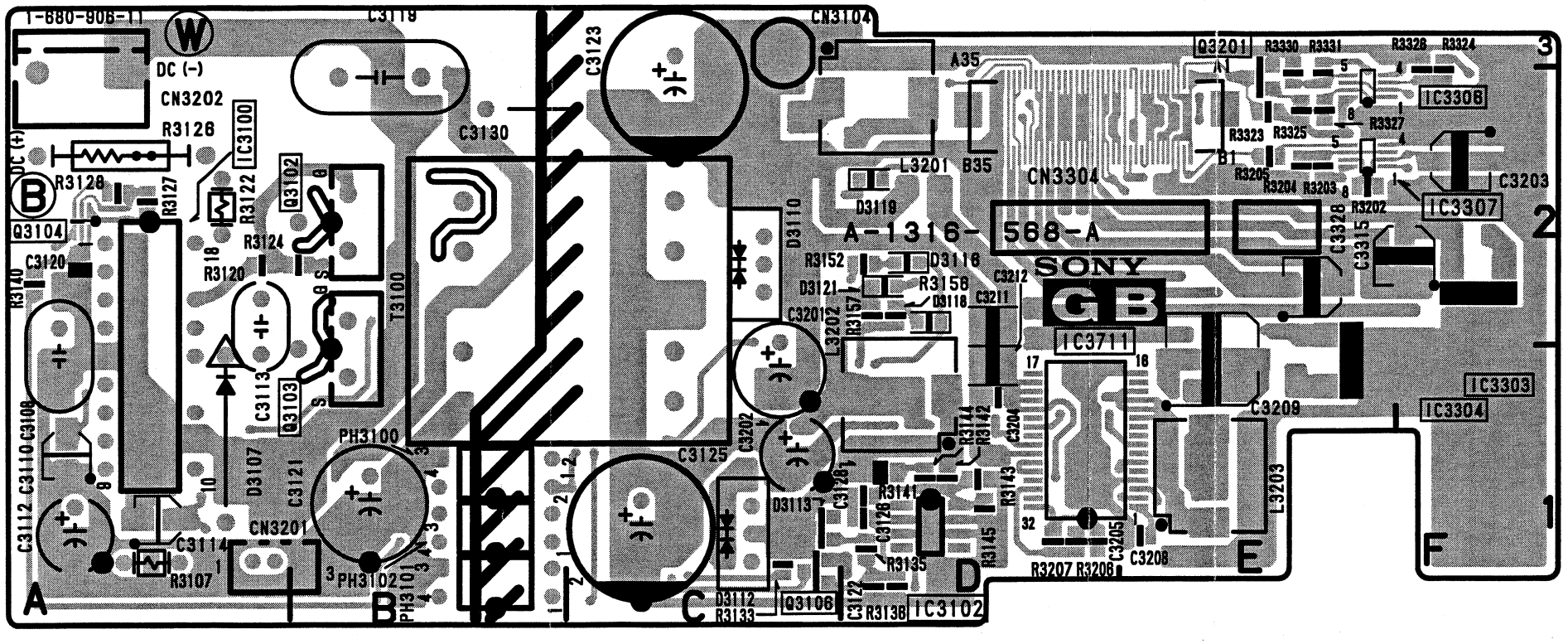

TL431BCDR2 (IC3102)

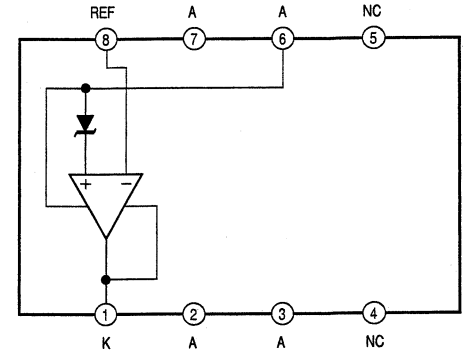

GB -A SIDE-
SUFFIX: -11

GB Board

IC3100	A-2
IC3102	D-1
IC3303	F-1
IC3304	F-1
IC3306	F-2
IC3307	F-2
IC3711	E-1
Q3102	A-2
Q3103	A-1
Q3104	A-2
Q3106	C-1
Q3107	*D-2
Q3109	*D-2
Q3110	*E-2
Q3201	E-3
D3103	*A-2
D3104	*A-1
D3107	A-1
D3108	*E-1
D3109	*B-2
D3110	C-2
D3112	C-1
D3113	C-1
D3116	D-2
D3118	D-2
D3119	D-2
D3121	C-2
D3201	*D-1
D3306	*F-2

*:B Side mount

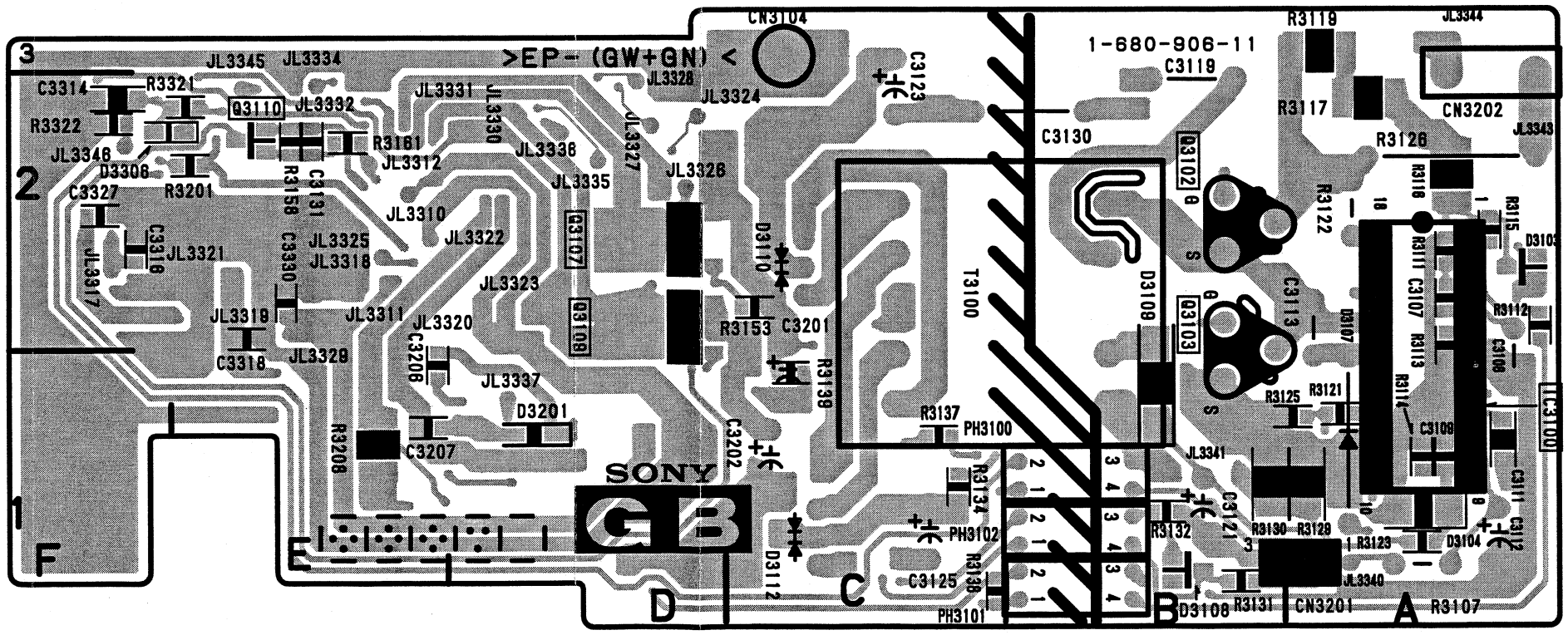

GB -B SIDE-
SUFFIX: -11

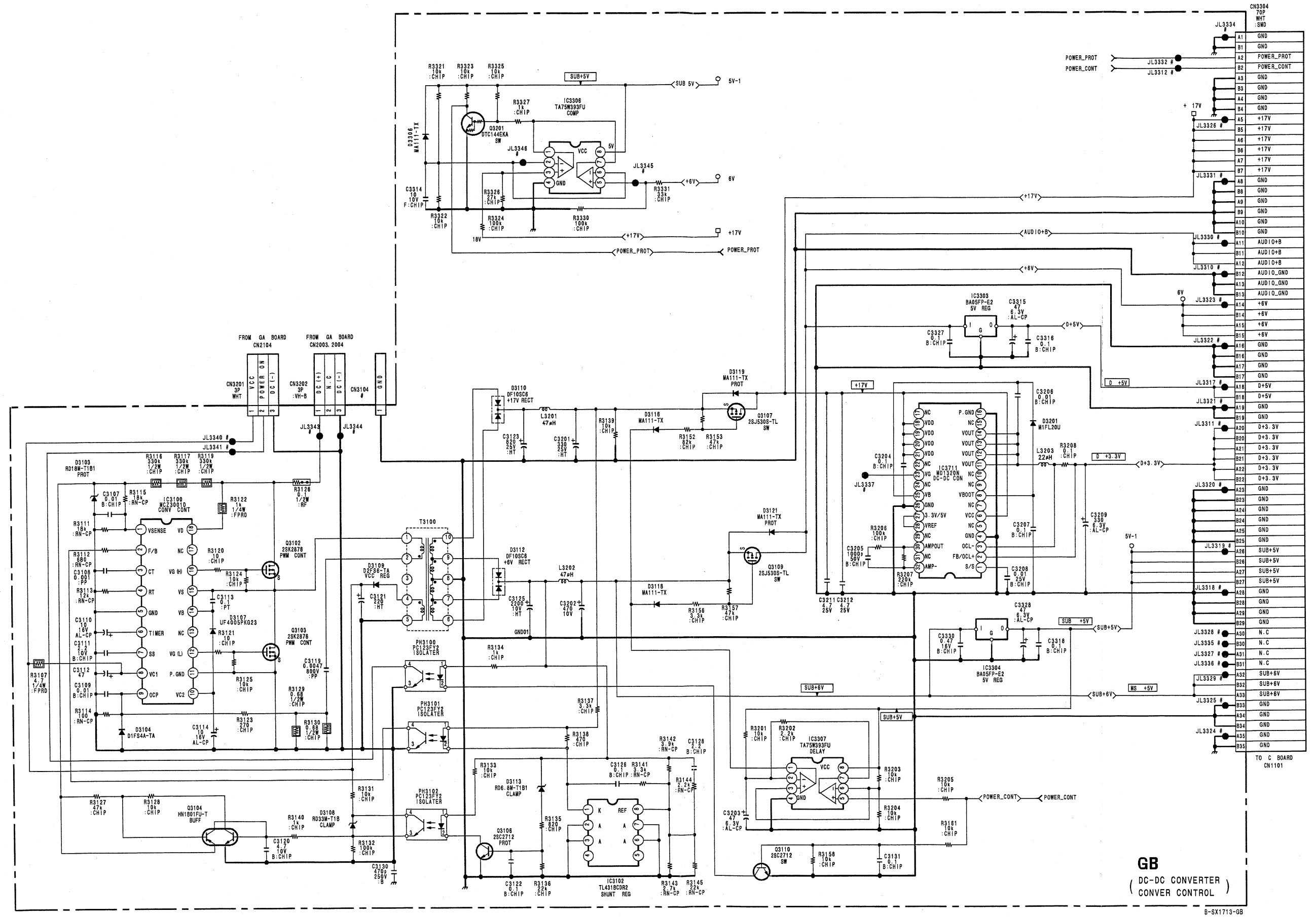

VPL-CS4/CX4

6-29 6-29

A B C D E F G H

1 2 3 4 5

GC Board

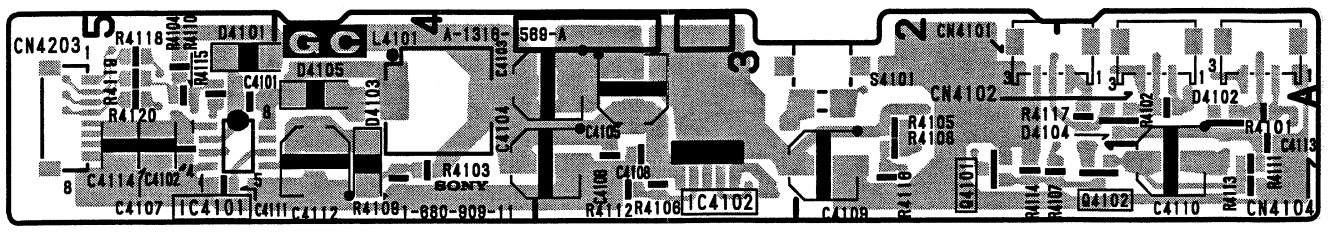

GC -A SIDE-
SUFFIX: -11

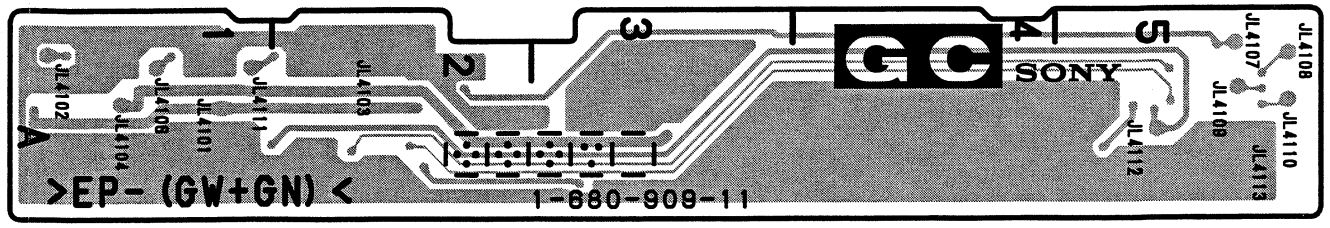

GC -B SIDE-
SUFFIX: -11

GC Board

IC4101 A-5
IC4102 A-3

Q4101 A-2
Q4102 A-1

D4101 A-5
D4102 A-1
D4103 A-4
D4104 A-2
D4105 A-4

*:B Side mount

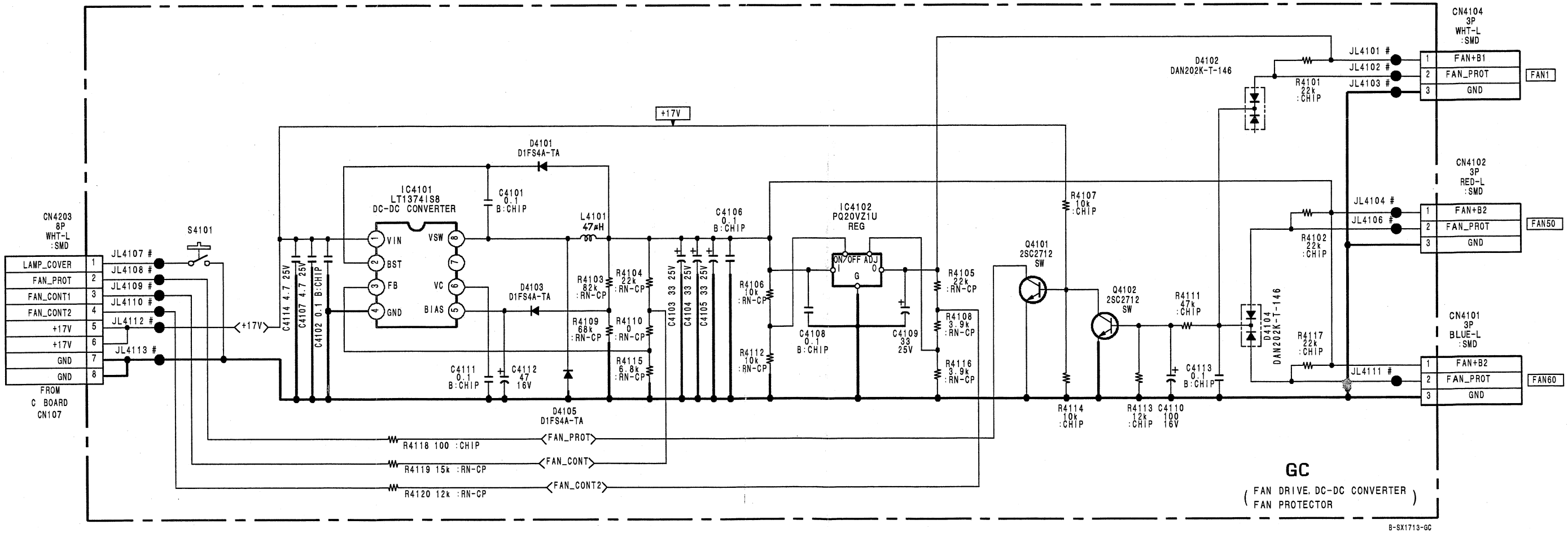

H Board

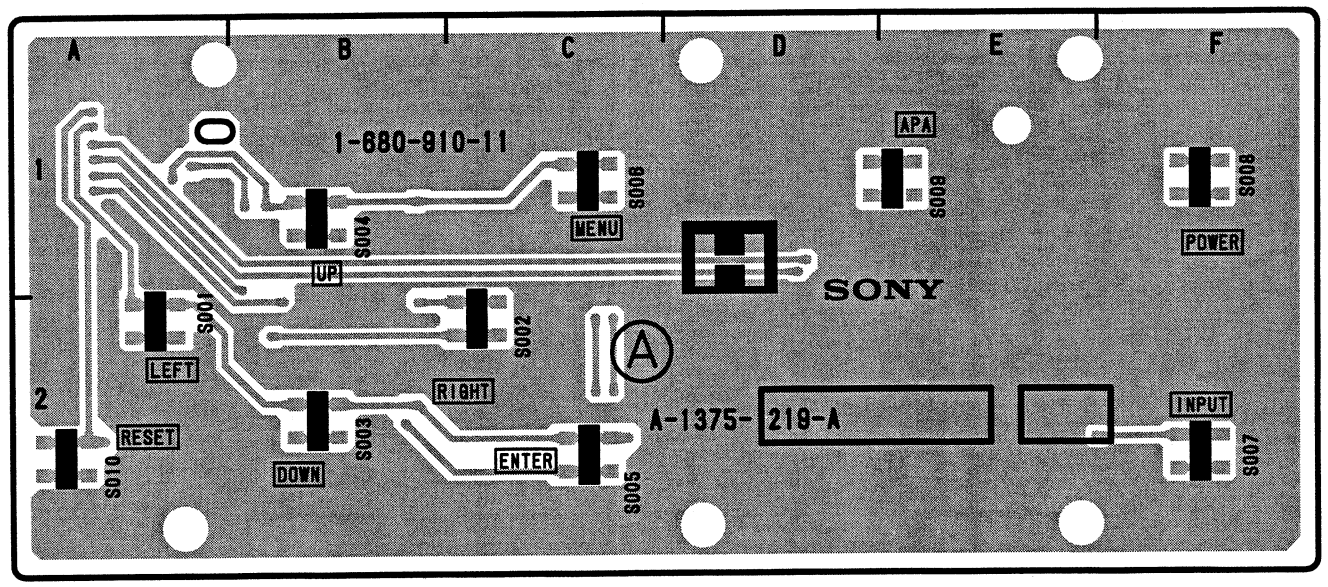

H -A SIDE-
SUFFIX: -11

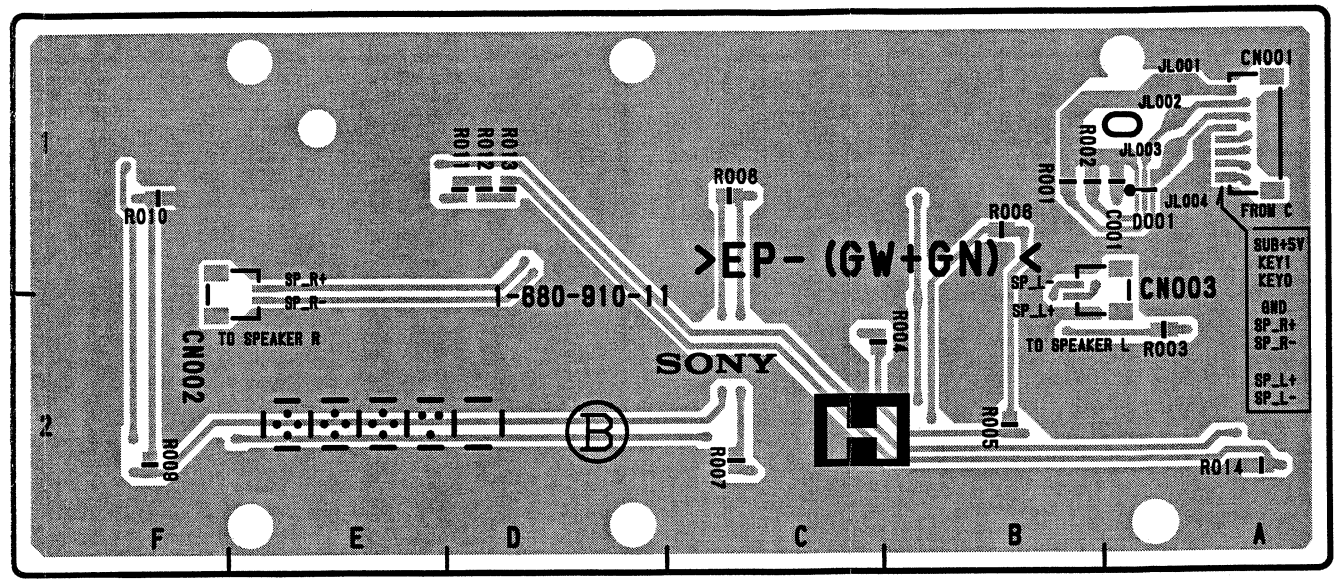

H -B SIDE-
SUFFIX: -11

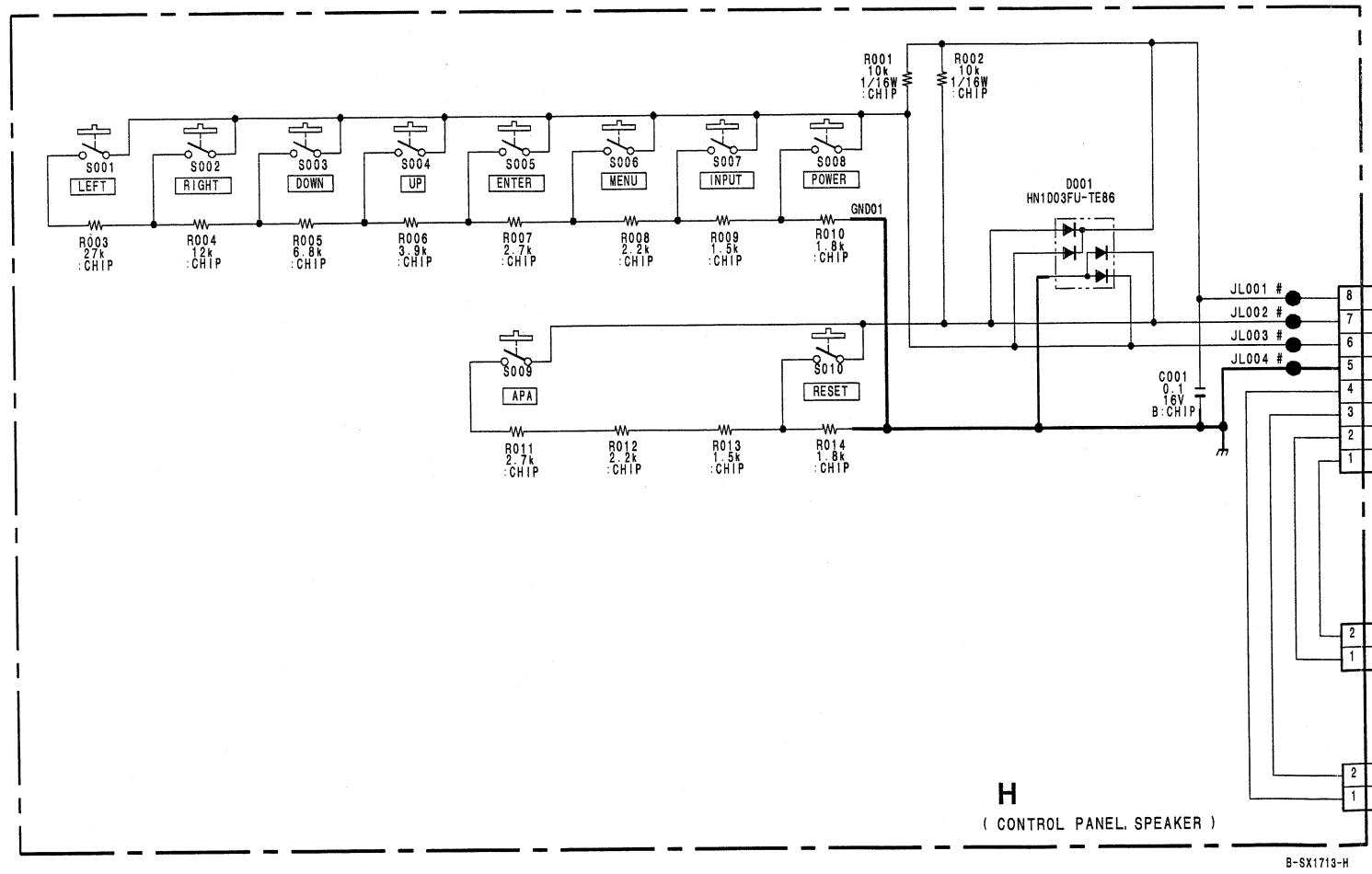

NF Board

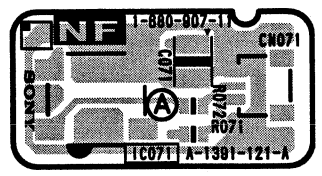

NF -A SIDE-
SUFFIX: -11

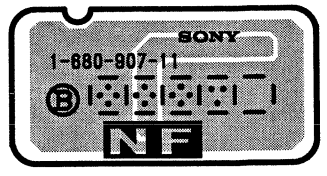

NF -B SIDE-
SUFFIX: -11

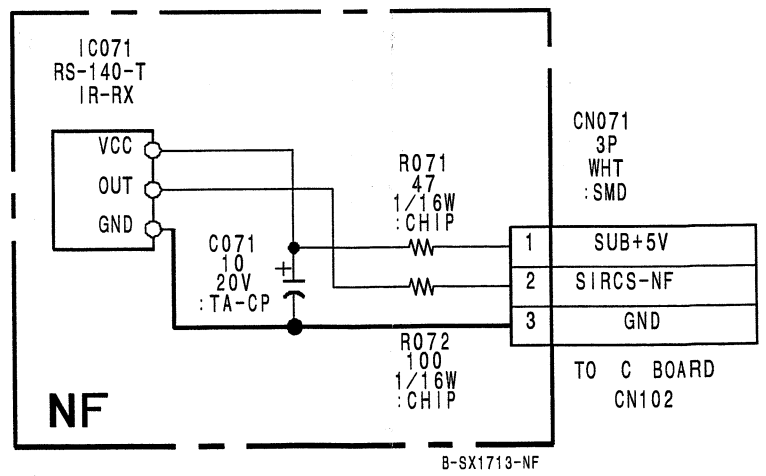

QB Board

Serial No.10,001 to 5,000,000 ;for VPL-CS4
Serial No.10,001 to 5,000,000 ;for VPL-CX4

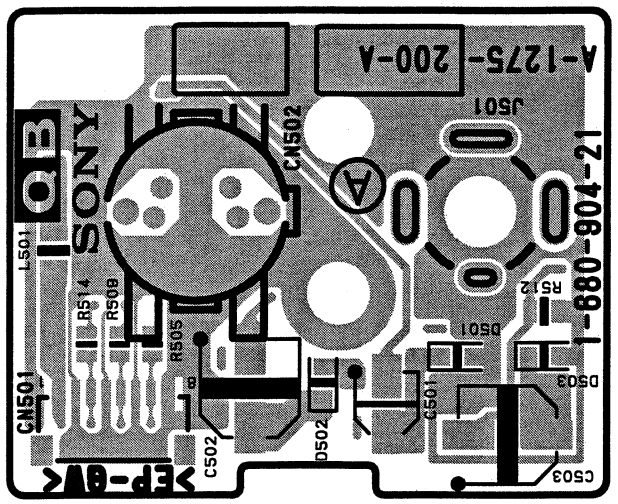

QB -A SIDE-
SUFFIX: -21

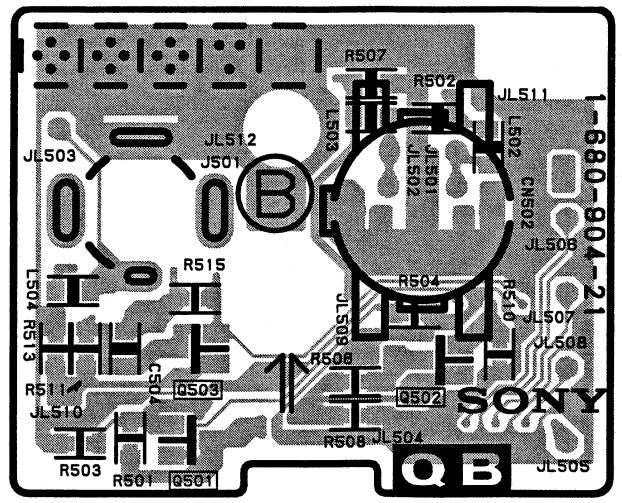

QB -B SIDE-
SUFFIX: -21

QB Board

Serial No.5,000,001 and later ;for VPL-CS4
Serial No.5,000,001 and later ;for VPL-CX4

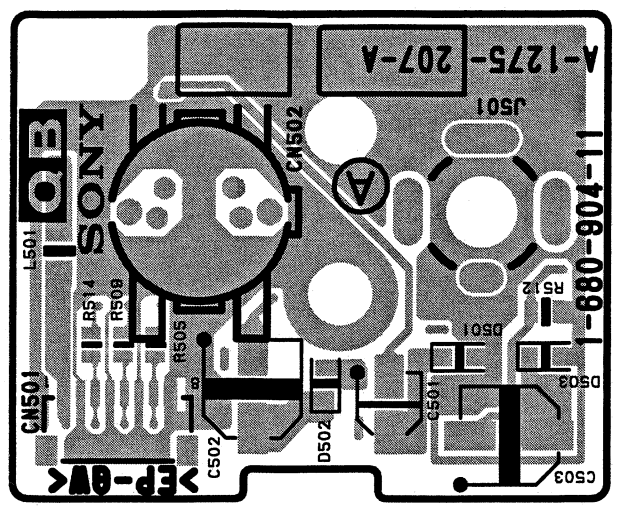

QB -A SIDE-
SUFFIX: -11

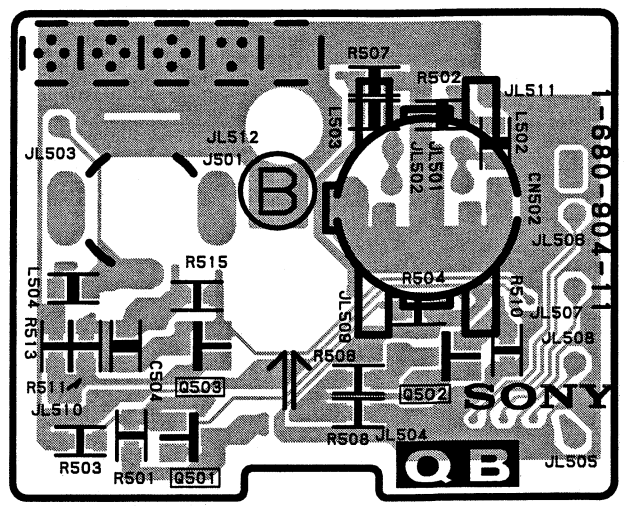

QB -B SIDE-
SUFFIX: -11

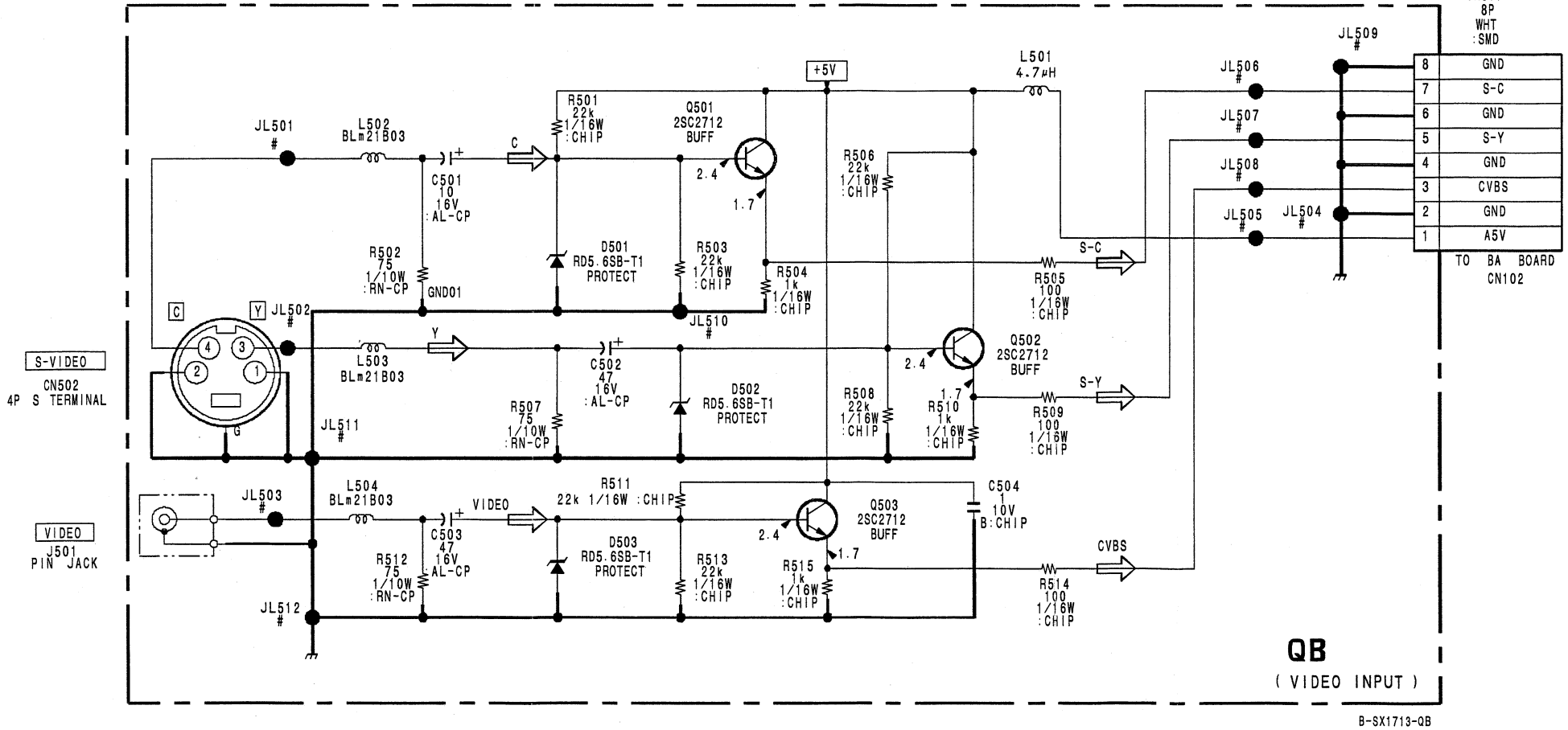

V Board

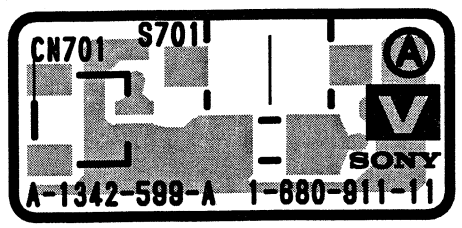

V -A SIDE-
SUFFIX: -11

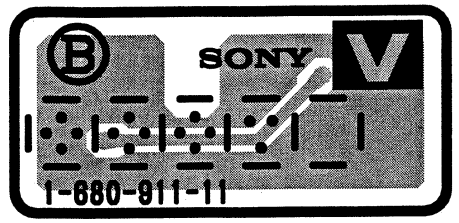

V -B SIDE-
SUFFIX: -11

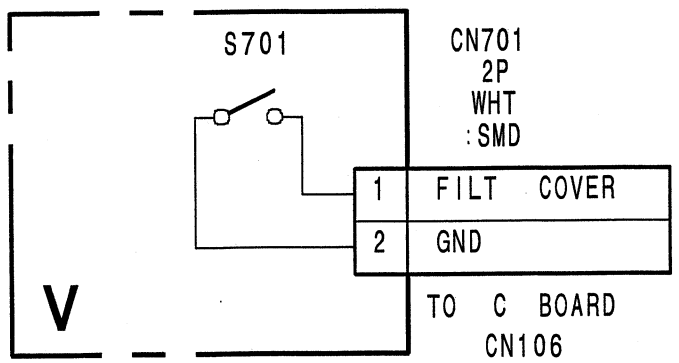

QA Board [VPL-CX4 ONLY]

Serial No.10,001 to 5,000,000

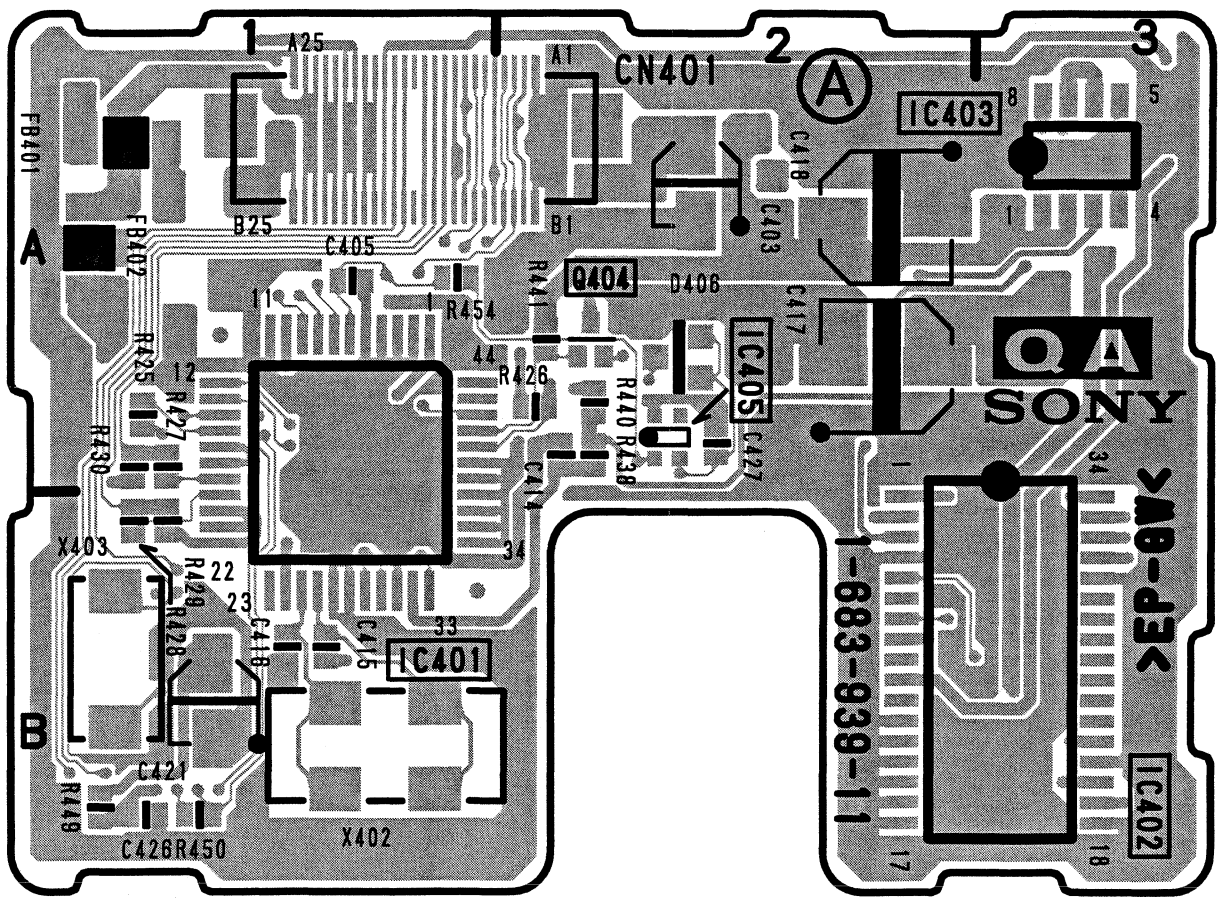

QA -A SIDE-

SUFFIX: -11

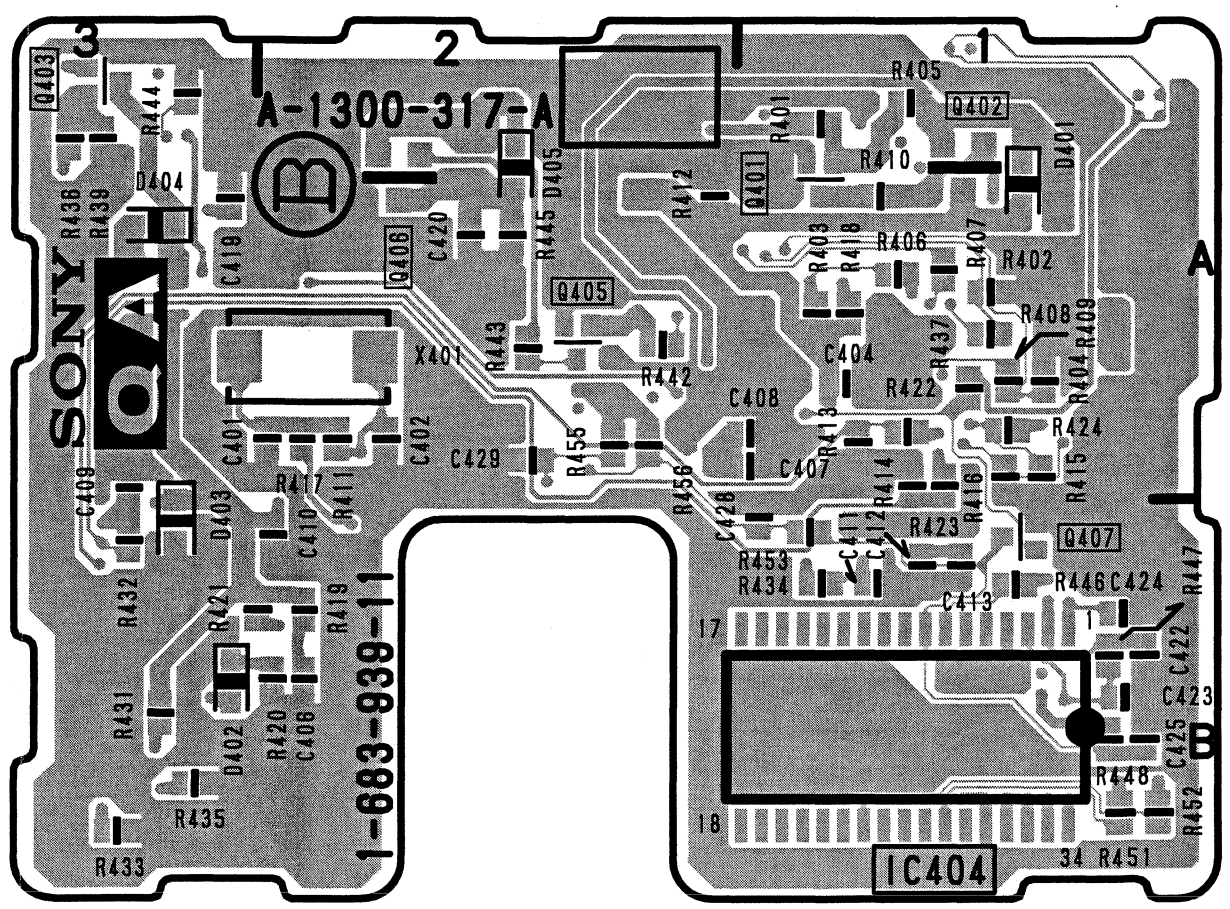

QA -B SIDE-

SUFFIX: -11

QA Board

```
D401    *A-1
D402    *B-3
D403    *B-3
D404    *A-3
D405    *A-2
D406     A-2

IC401    B-1
IC402    B-3
IC404   *B-1
IC405    A-2

Q401    *A-1
Q402    *A-1
Q403    *A-3
Q404     A-2
Q405    *A-2
Q406    *A-2
Q407    *B-1

*:B Side mount
```

QA Board [VPL-CX4 ONLY]

Serial No.5,000,001 and later

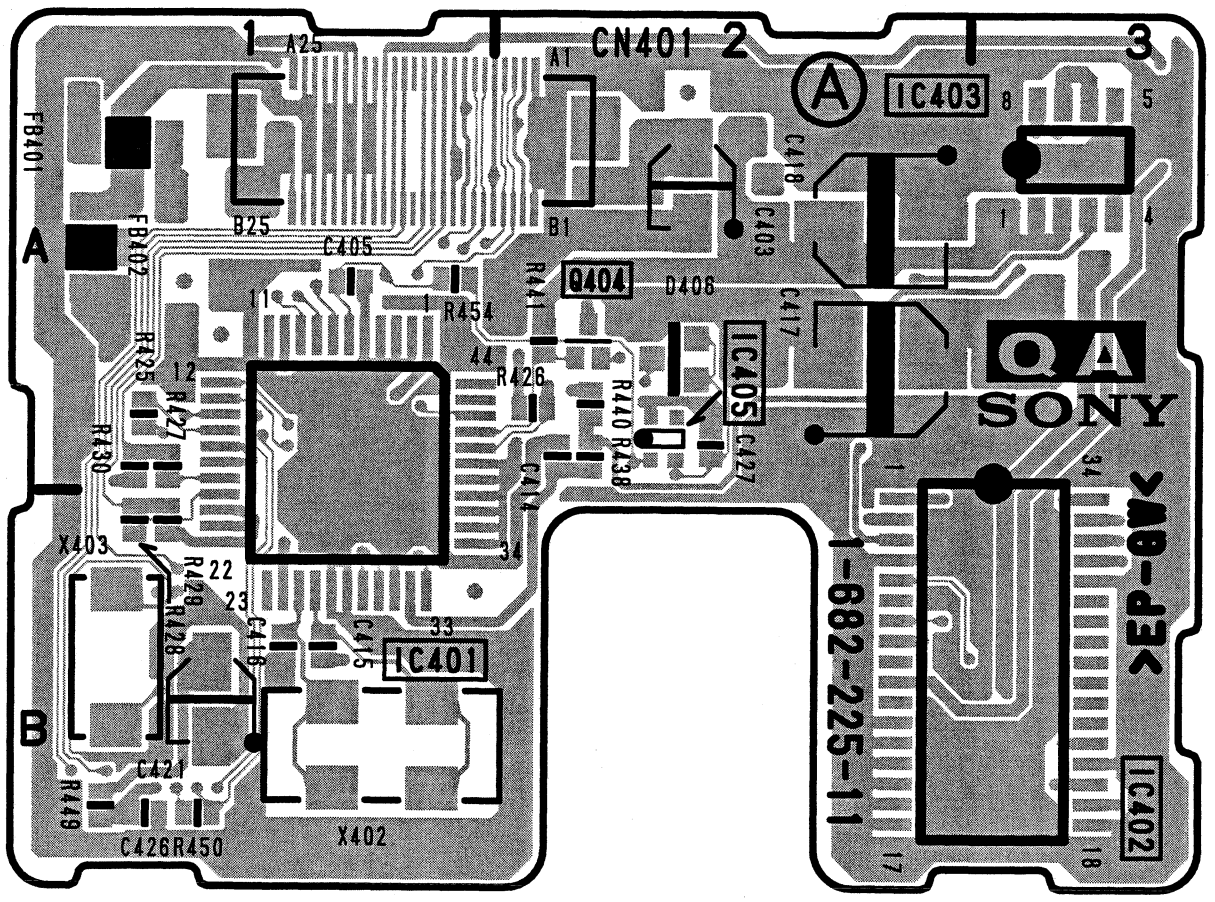

QA -A SIDE-

SUFFIX: -11

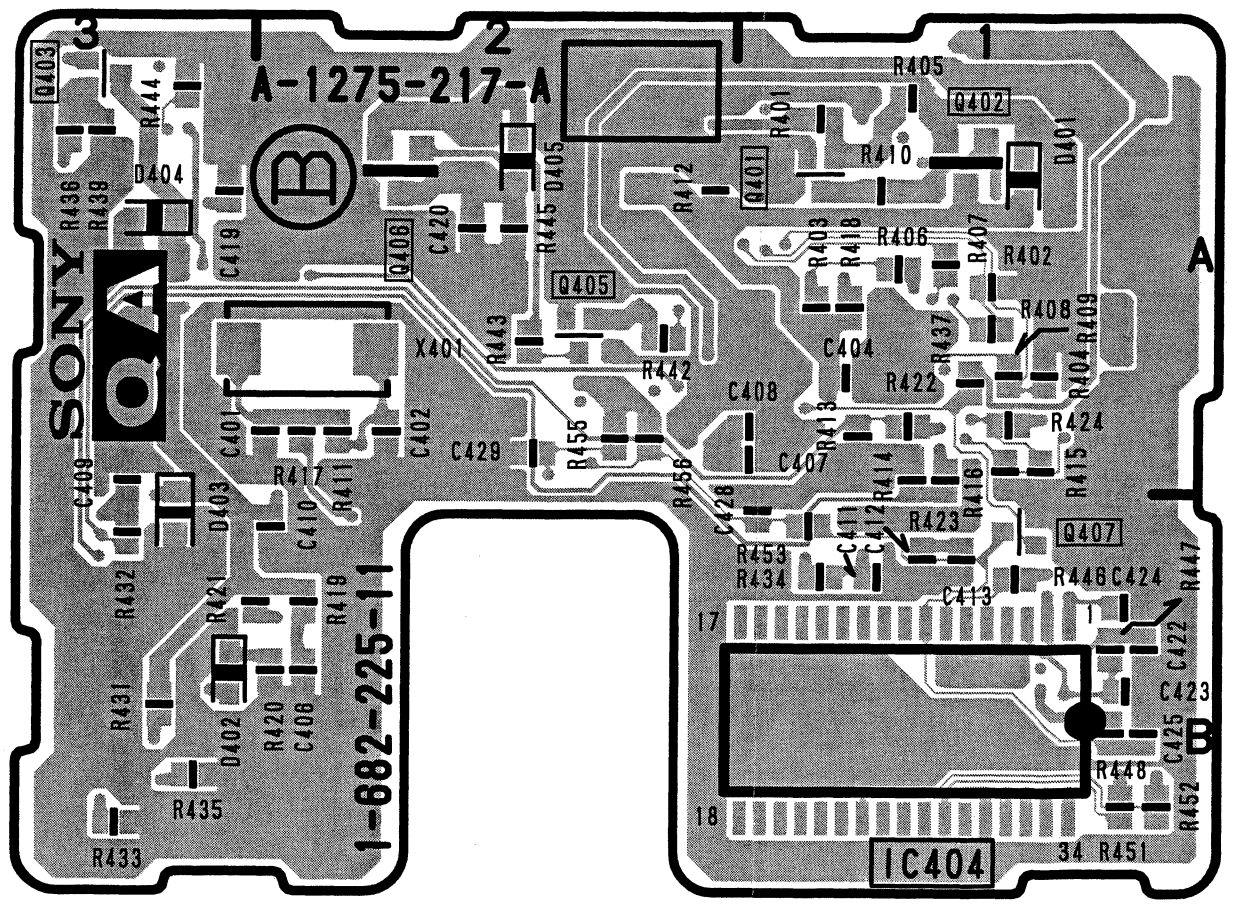

QA -B SIDE-

SUFFIX: -11

QA Board

```
D401   * A-1
D402   * B-3
D403   * B-3
D404   * A-3
D405   * A-2
D406     B-2

IC401    A-1
IC402    A-3
IC403    B-2
IC404  * B-1
IC405    B-2


Q401   * A-1
Q402   * A-1
Q403   * A-3
Q404     B-2
Q405   * A-2
Q406   * A-2
Q407   * B-1

*:B Side mount
```

[VPL-CX4 ONLY]

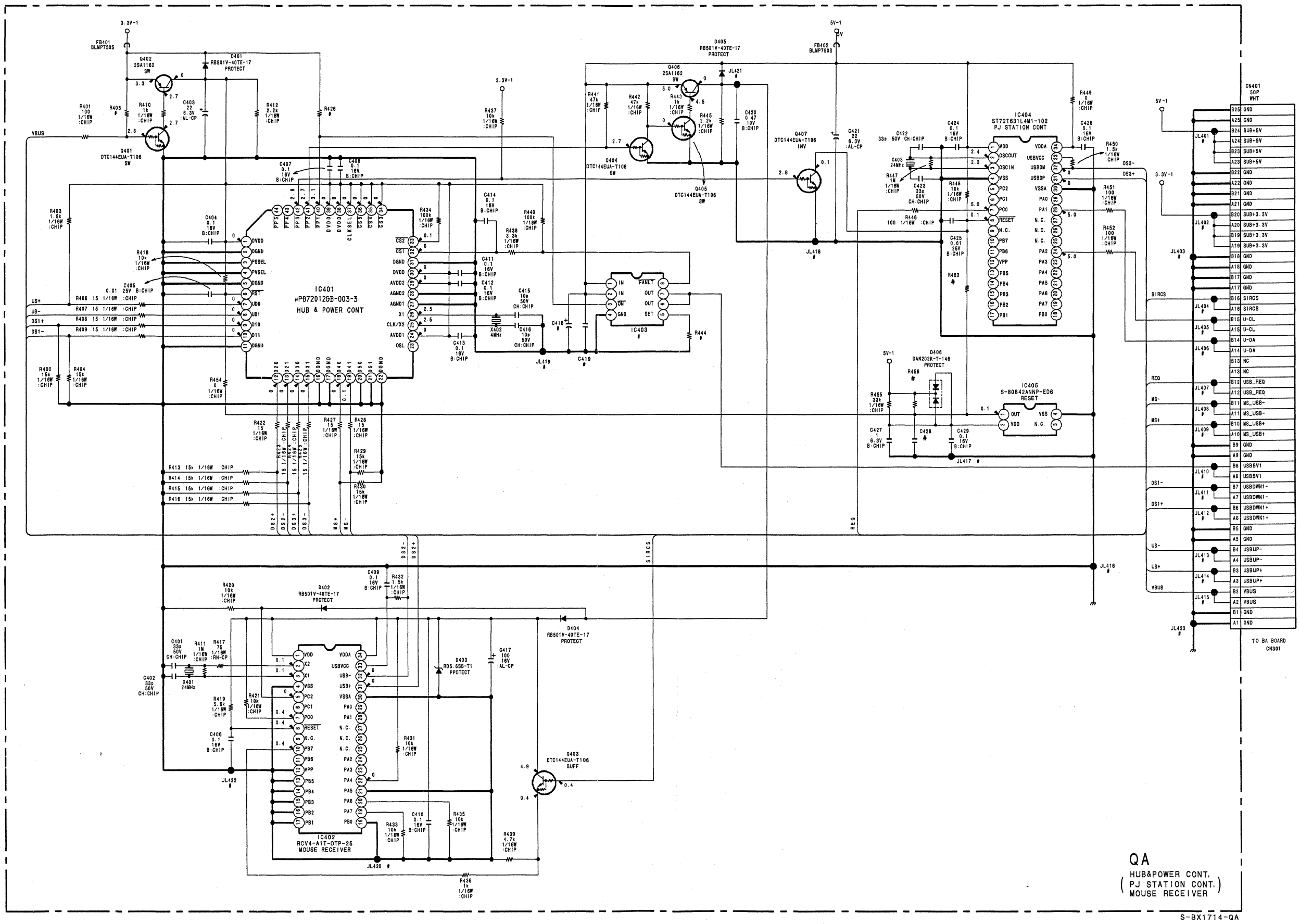
IC401
μPD720126B-003-3
HUB & POWER CONT
IC402
RCV4-A1T-DTP-25
MOUSE RECEIVER
IC403
IC404
ST72T631L4M1-102
PJ STATION CONT
IC405
S-80842ANNP-ED6
RESET
Q401 DTC144EUA-T106 SW
Q402 2SA1162 SW
Q403 DTC144EUA-T106 BUFF
Q404 DTC144EUA-T106 SW
Q405 DTC144EUA-T106 SW
Q407 DTC144EUA-T106 INV
Q408 2SA1162 SW
D401 RB501V-40TE-17 PROTECT
D402 RB501V-40TE-17 PROTECT
D403 RDS.6SB-T1 PPOTECT
D404 RB501V-40TE-17 PROTECT
D405 RB501V-40TE-17 PROTECT
D406 DAN202K-T-146 PROTECT
FB401 BLM750S
FB402 BLM750S
X401 24MHz
X402 4MHz
X403 24MHz
CN401 50P WHT
TO BA BOARD CN301
3.3V-1
5V-1
VBUS
US+
US-
DS1+
DS1-
DS2+
DS2-
DS3+
DS3-
MS+
MS-
SIRCS
REQ
QA
HUB&POWER CONT.
PJ STATION CONT.
MOUSE RECEIVER
S-BX1714-QA

SAFETY CHECK-OUT

After correcting the original service problem, perform the following safety checks before releasing the set to the customer :

Check the metal trim, "metallized" knobs, screws, and all other exposed metal parts for AC leakage. Check leakage as described below.

LEAKAGE TEST

The AC leakage from any exposed metal part to earth ground and from all exposed metal parts to any exposed metal part having a return to chassis, must not exceed 0.5 mA. Leakage current can be measured by any one of three methods.

1. A commercial leakage tester, such as the Simpson 229 or RCA WT-540A. Follow the manufacturers' instructions to use these instruments.
2. A battery-operated AC milliammeter. The Data Precision 245 digital multimeter is suitable for this job.
3. Measuring the voltage drop across a resistor by means of a VOM or battery-operated AC voltmeter. The "limit" indication is 0.75 V, so analog meters must have an accurate low-voltage scale. The Simpson 250 and Sanwa SH-63Trd are examples of a passive VOM that is suitable. Nearly all battery operated digital multimeters that have a 2 V AC range are suitable. (See Fig. A)

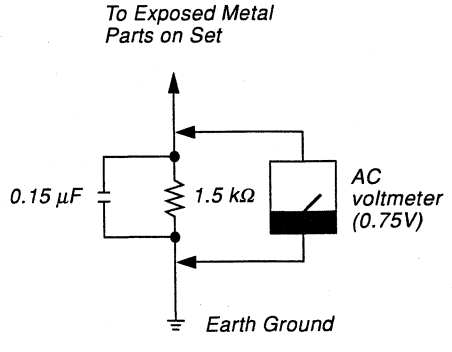

Fig A. Using an AC voltmeter to check AC leakage.